GUORUI HYDRAULICS
INNOVATION LEADS THE FUTURE

Technical Information

Sectional Valves

GKV35 / GKV50 / GKV80 / GKVL80

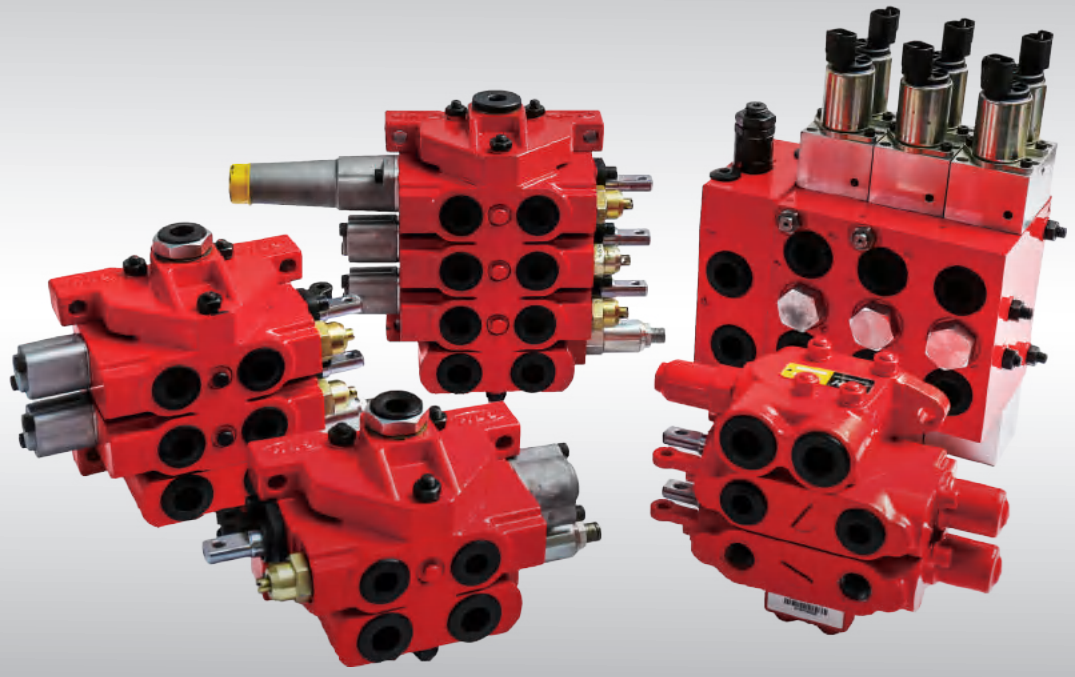

www.grhpro.com

GUORUI HYDRAULICS

Innovation Leads the Future

GRH try our best to create more value for you with products and service

Guorui Hydraulics

About GRH

GRH was established in 1986, focusing on providing customers with quality hydraulic components and solutions to hydraulic system in the applications of engineering machinery, mobile industries, agricultural machinery, aviation, mining, and other fields. Main products include gear pump, gear motor, flow divider, orbital motor, load sensing proportional valve, monoblock valve, sectional valve, manifold assembly and hydraulic power unit as well.

Long-term Development Strategy

Reducing emissions by new energy is one of GRH's long-term strategies. GRH will be providing innovative technologies, products and services for the global development of new energy, moving towards a century development strategy, and writing a century-new chapter in the hydraulic field.

Innovation Leads the Future

Through a few decades of development, GRH has built an intelligent manufacturing factory, gathering international R&D talents, accumulating rich R&D and manufacturing experience, possessing independent intellectual property rights, continuously providing customers with new products and technologies, and creating value for all of the customers.

Sectional Control Valves

05-18 GKV35 Series

GKV50 Series 19-39

40-59 GKV80 Series

GKVL80 Series 60-70

GKV35 Series Sectional Valves

05 Introduction
Features 05
06 Technical Data
Performance Data 06-07
08 Operation Principle
Inlet Section Dimensions 09
09 Inlet Section Hydraulic Schematics
Typical Work Section (Main Section) Dimensions 10
11-12 Typical Work Section (Main Section) Hydraulic Schematics
Typical Return Section (End Cap) Dimensions 13
14 Typical Return Section (End Cap) Hydraulic Schematics
Work Section (Main Section) Drive Styles 15
16 Typical Spool Functions
Application Example 17
18 Ordering Code

Introduction of GKV35

GKV35 series sectional valves are open circuit valves. Mainly used in mobile machines such as, agricultural machinery, construction machines, mining equipment, material handling equipment as well as maintenance machines. The valve series adapted modular design. The system designer can choose different modules to design a complex system. Main valve spool is designed to satisfy with the customer requirements, which provides excellent flow characteristics and very low flow force. With different inlet modules, it gives user the freedom for choosing different relief valve and different port locations. There are numbers of different work section modules to choose to satisfy the customer needs. Different end sections also provide the customer needs for return ports or power beyond functions.

Functions

- A/B Port with overload valve on main section
- A Port with overload valve on main section
- B Port with overload valve on main section
- A/B Port with check valve
- End section with oil return port
- End section without oil return port
- End section with power beyond port
- Provide other cartridge valve option

Features

- Cast iron body (inlet section, main section and end end cap).
- Spring cap, mechanical detent cap, as well as electric or hydraulic pilot controlled module body are made by cast aluminum or die-cast aluminum.
- Parallel circuit. Each section has its own load check valve, Each section has load relief option and relief style options.
- Can be changed to series circuit.
- Provides dump valve options for each work port.
- Provides different drive modules (hydraulic remote, manual control, wire driving).
- Provides power beyond port.
- Can be modified to be a close circuit.
- Provides mechanical detent.
- Provides options for different type of relieves and different relief valve locations in the inlet.
- Provides options for mechanically actuated P. O. check valves to satisfied with the needs for tractors and mobile cranes.
- Provides different spool functions to be used for controlling double acting cylinder , single acting cylinders, hydraulic motors.
- Provides floating functions for spools.
- Provides excellent flow characteristics and small operating force.
- Can be proportional control without pressure compensation.
- Can be assembled with 1-8 main sections.

Technical Data

Rated Flow Rate	35L/min	Max. Pressure at T port	25bar
Max. Flow Rate	40L/min	Internal leakage(@70 bar)A, B to T	＜8cc/min
Min. Flow Rate	10L/min	With P.O. check，technical data	＜3cc/min
Max. Pressure at P port	250bar	Spool stroke(1，2 position)	+7/-7mm
Max. Pressure at A, B port	210bar	With floating function(1, 2 and F position)	+7/-7 -10mm
Solenoid can be either 12 or 24VDC, corresponding current is 0-1.5 or 0-0.75 Amp.			

Performance Data

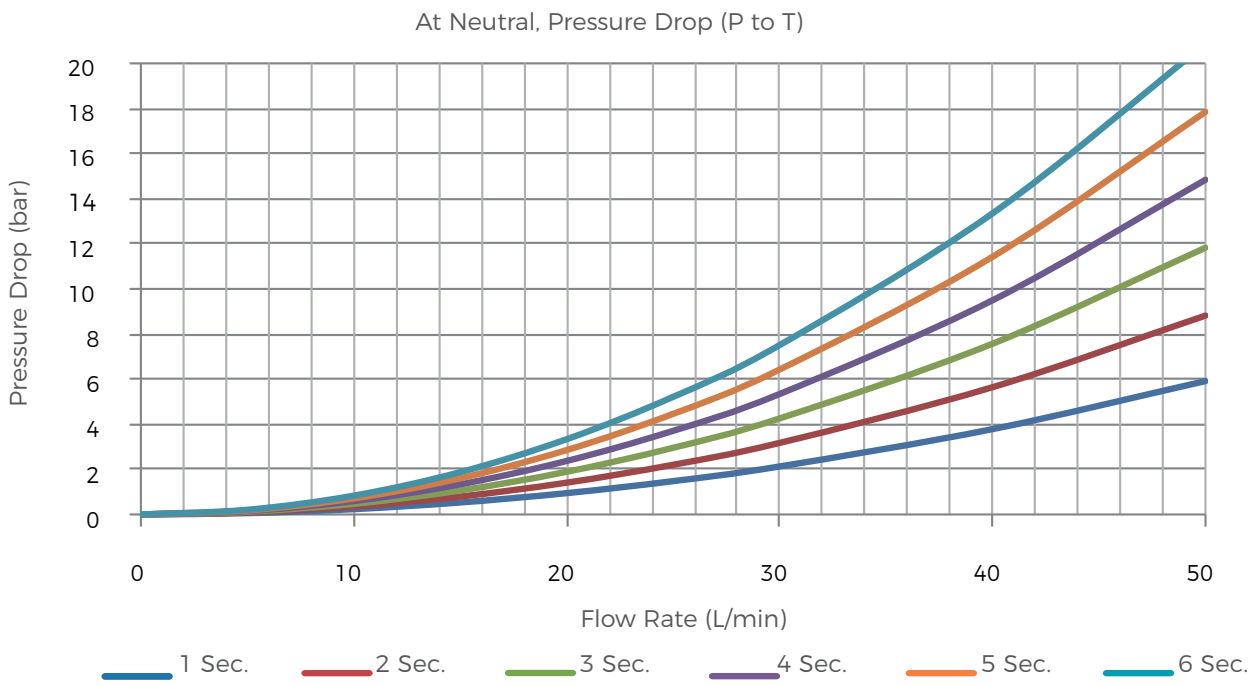

Performance Data

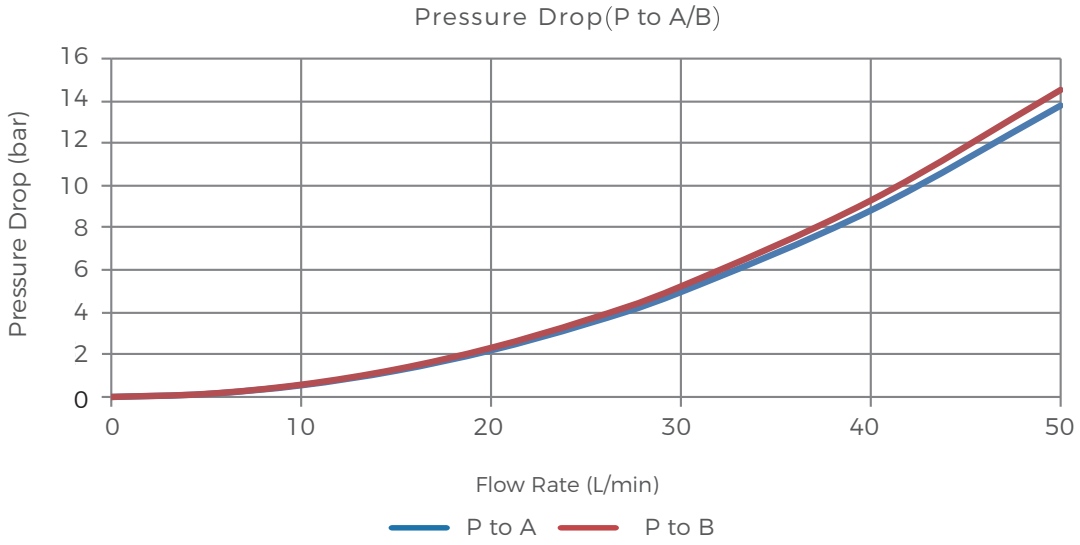

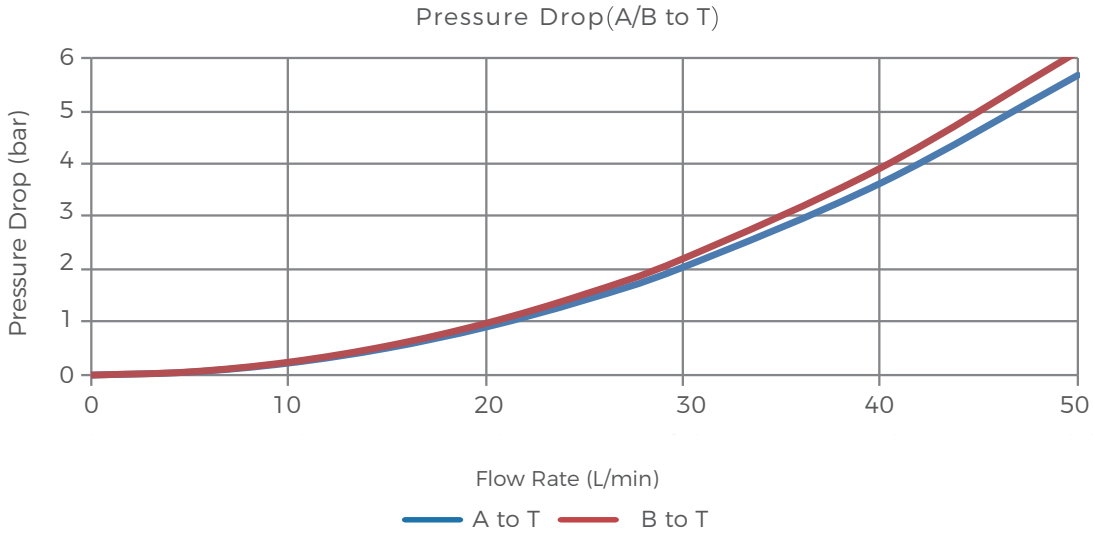

Operation Principle

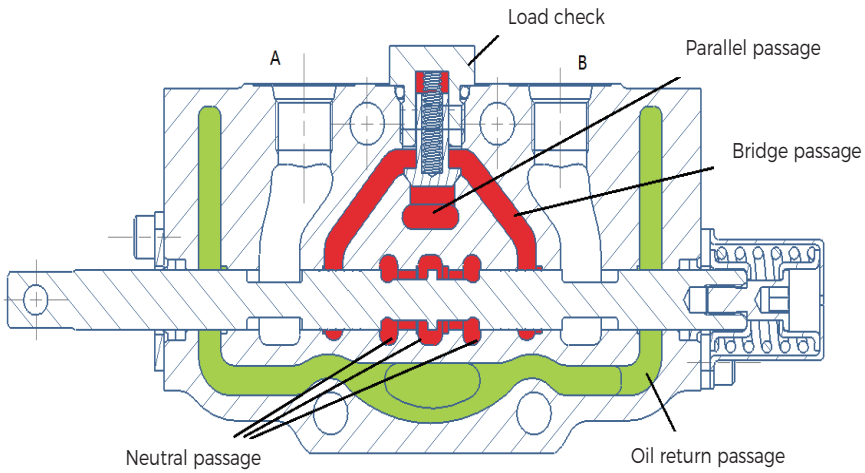

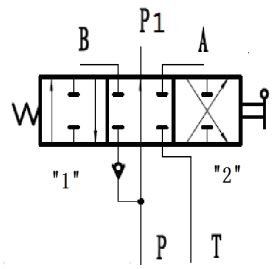

GKV35 series sectional valve is an open circuit 3-position 4-way valve. When spool is in its neutral position, the flow from pump passes through the neutral passage to tank, with small pressure drops. When one of the spool is moved to LEFT or RIGHT position, the neutral passage is blocked. The flow from pump can only pass the parallel passage to load check valve, then passes through the bridge and spool opening to work port B or A.

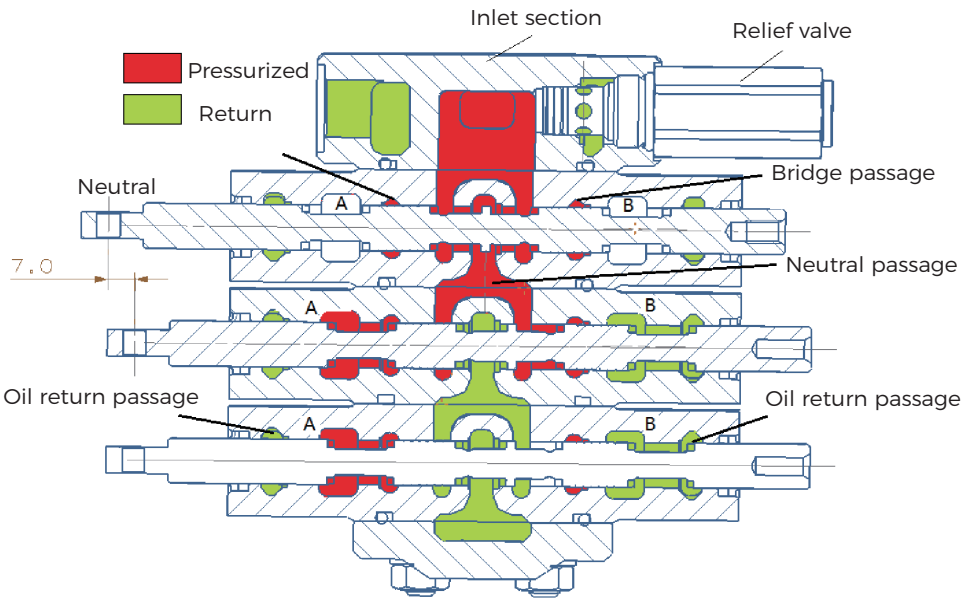

For multi-section valves, if one of the section spool is in left or right position, there is no flow in its down stream section neutral passage. The main throttle occurs on the valve opening between bridge passage and spool. The operator can control more than one spools, but the flow rate for each controlled section depends on the load.

Inlet Section Dimensions

JS01 Inlet Section

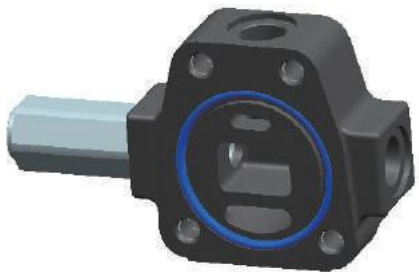

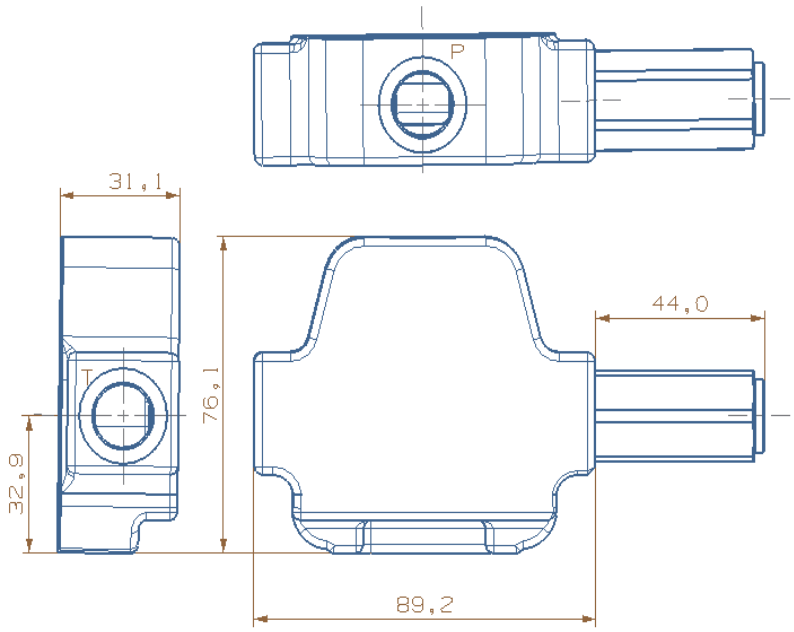

Inlet Section Hydraulic Schematics

Code	Hydraulic Schematic	Main Functions	Notes
JS01	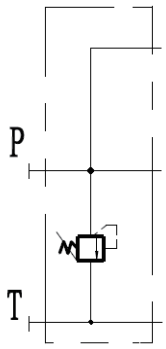	Inlet section with direct acting relief valve	
JS02	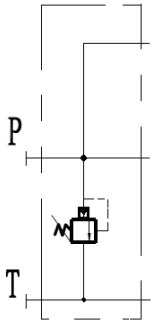	Inlet section with pilot-operated relief valve	

Typical Work Section (Main Section) Dimensions

ZS01 Work Section

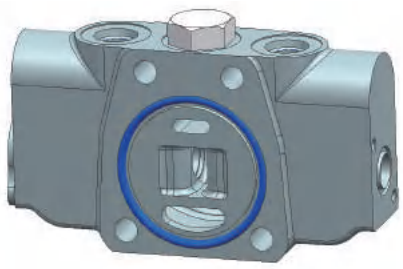

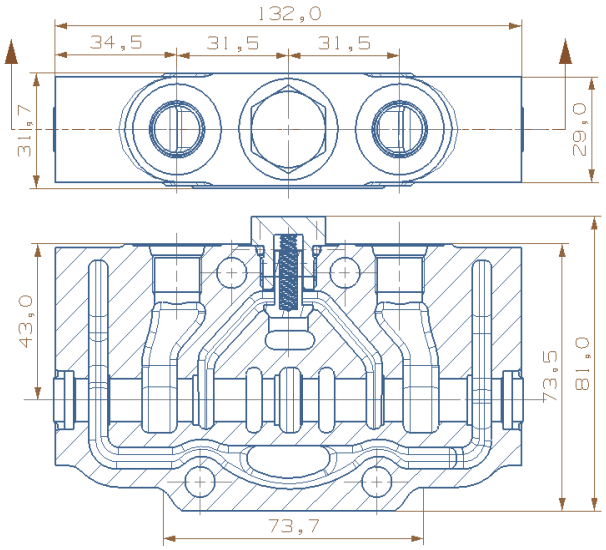

ZS04 Work Section

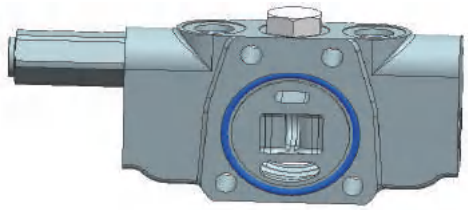

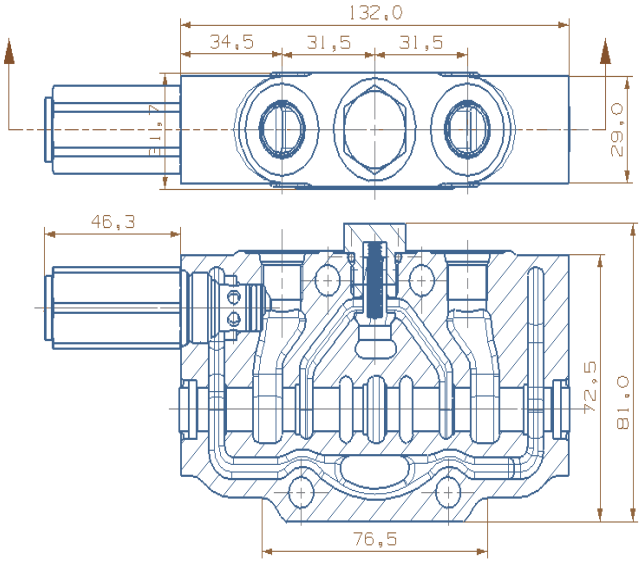

ZS06 Work Section

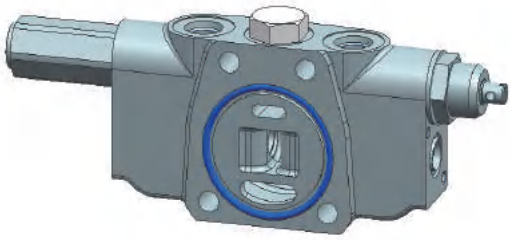

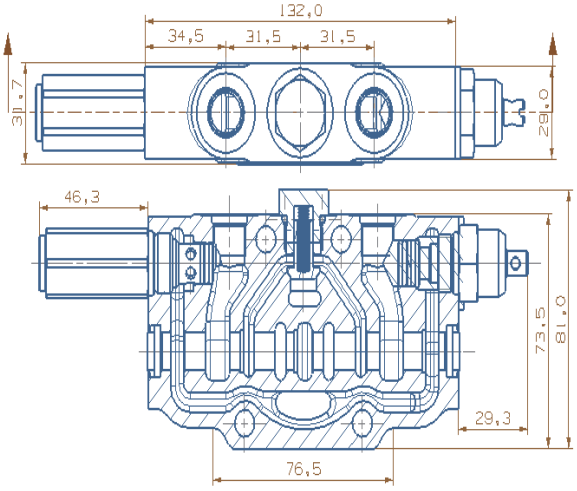

Typical Work Section (Main Section) Hydraulic Schematics

Code	Hydraulic Schematic	Main Functions	Notes
ZS01	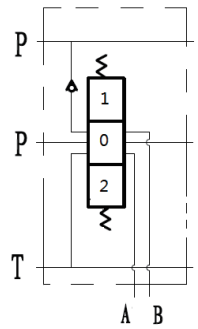	Basic section (on A and B ports)	
ZS02	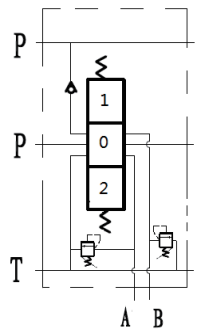	Overload relief valves on both A and B ports	
ZS03	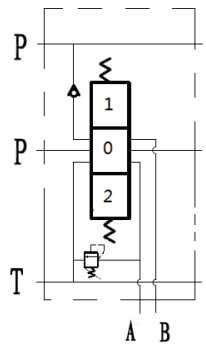	Overload relief on A port	
ZS04	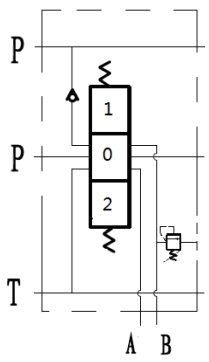	overload protection valve	

Typical Work Section (Main Section) Hydraulic Schematics

Code	Hydraulic Schematic	Main Functions	Notes
ZS05	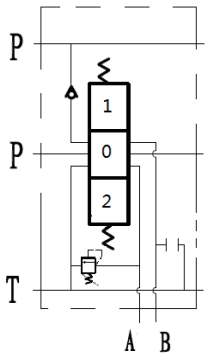	Overload relief on A port Check valve on B port	Tractor and auxiliary valve application
ZS06	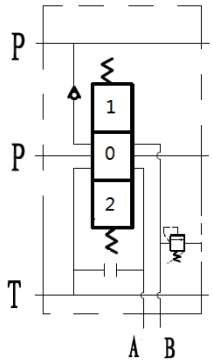	Overload relief on B port Check valve on A port	Tractor and auxiliary valve application

Typical Return Section (End Cap) Dimensions

DK01 Return Section (End Cap)

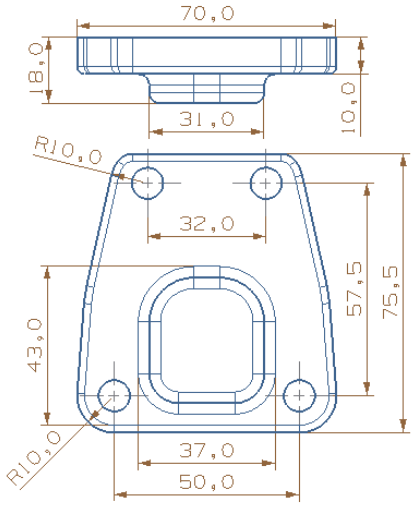

DK02 Return Section (End Cap)

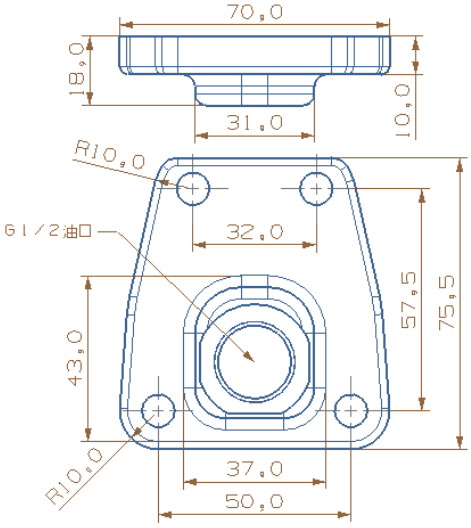

DK03 Return Section (End Cap)

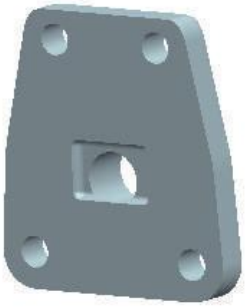

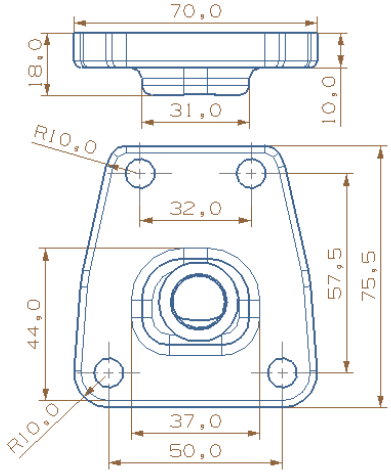

Typical Return Section (End Cap) Hydraulic Schematics

Code	Hydraulic Schematic	Main Functions	Notes
DK01	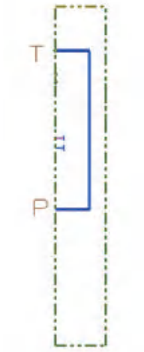	End section without T port	
DK02	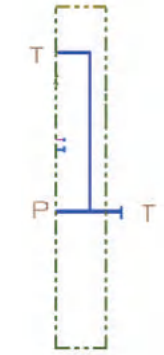	End section with T port	
DK03	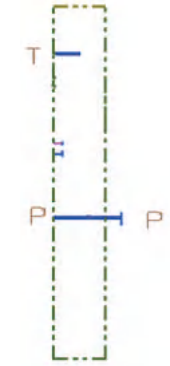	End section with power beyond port	Tractor applications

Work Section (Main Section) Drive Styles

Drive Style Code	Hydraulic Schematic	Functions
KQ1	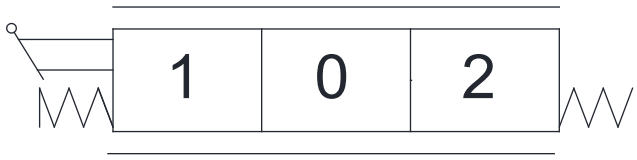	Standard manual control
KQ2	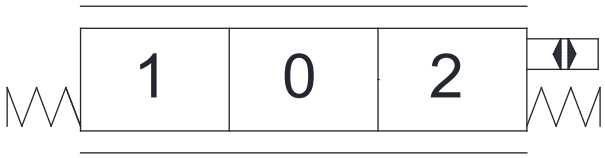	Hydraulic remote control
KQ3	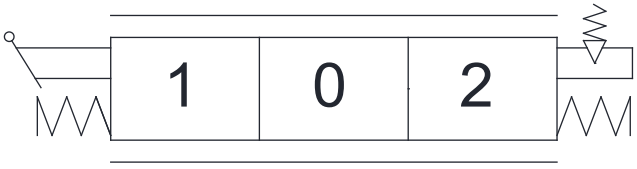	Manual control with mechanical detent
KQ4	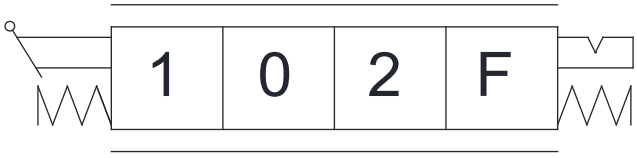	Manual control with 4th position floating and detent
KQ5	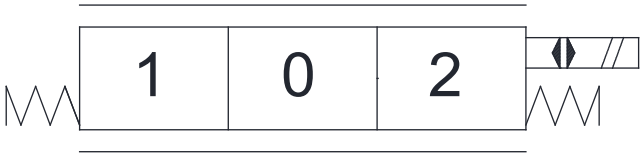	Wire controlled

Typical Spool Functions

Drive Style Code	Hydraulic Schematic	Functions	Notes
FG1	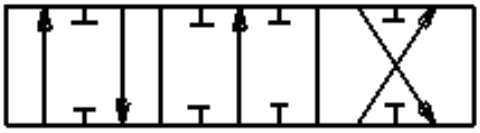	3-position 4-way At neutral: P, T, A, B are all blocked	Double acting cylinder applications
FG2	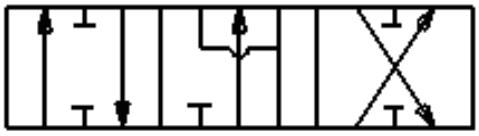	3-position 4-way At neutral: P blocked, T, A, B connected	Hydraulic motor applications
FG3	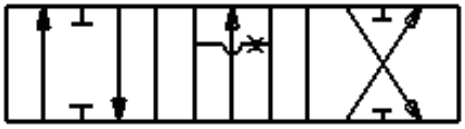	3-position 4-way At neutral: P, A, B and T all connected	Hydraulic motor applications
FG4	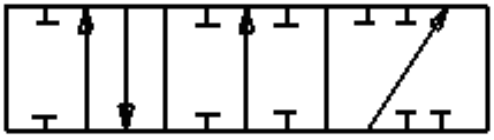	3-position 3-way At neutral: P, T, A, B all blocked	Single acting cylinder applications
FG5	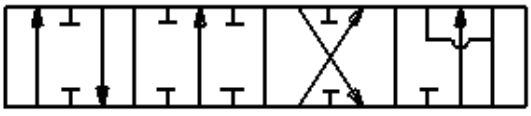	4-position 4-way At neutral: P, T, A, B are all blocked 4th position floating	Double acting cylinder applications
FG6		4-position 4-way At neutral: P blocked, T, A and B are connected 4th position floating	Double acting cylinder or hydraulic motor applications

Application Example

Example Of Manually Controlled Sectional Valve

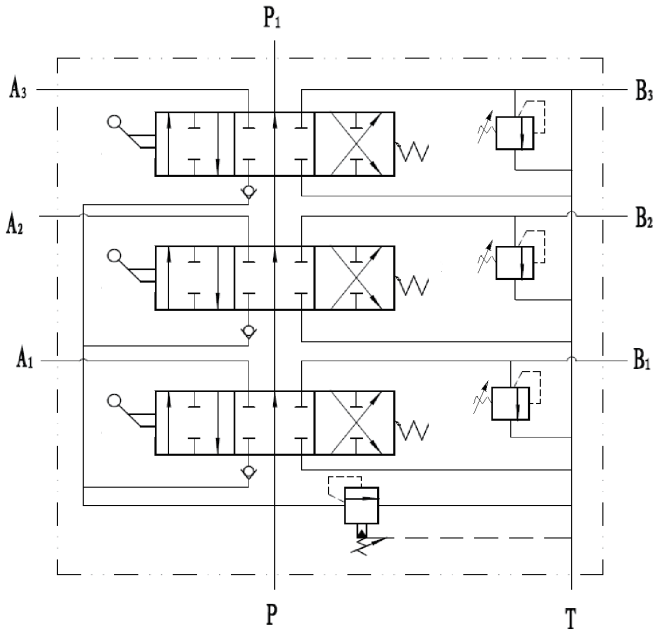

Three Sections Valve Dimensions

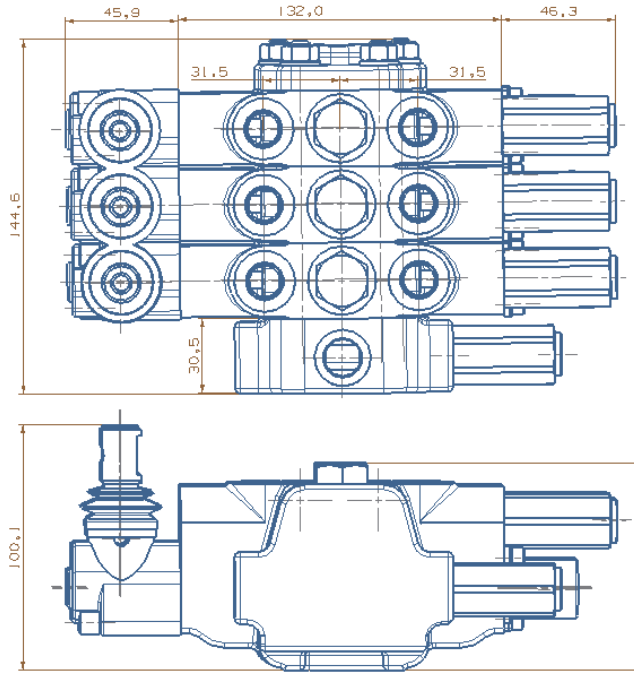

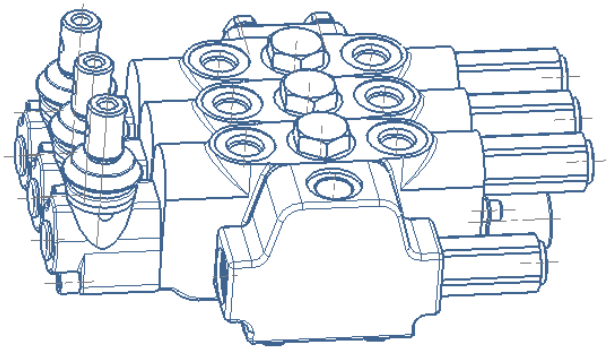

Ordering Code

GKV35	/*	-JS**	/***	-DK**	-O1	-ZS**	KQ*	-FG*	-DC/**	-QL/***	-RF*	-O2	...
a	b	c	d	e	f	g	h	i	j	k	l	m	n

ⓐ Model
ⓑ Number of sections
ⓒ Inlet section code
ⓓ Main relief valve settings (bar)
ⓔ Return section (end cap) code
ⓕ First section
ⓖ Work section code
ⓗ Drive style code
ⓘ Spool function code
ⓙ Electrical option
12VDC, 24VDC, 00=none electrical
ⓚ Expected flow rate (L/min)
ⓛ Over load relief valve code
ⓜ Second section
ⓝ .....

Ordering Example

GKV35	/3	-JS01	/210	-DK01	-O1	-ZS02	-KQ5	-FG1	-QL/30
a	b	c	d	e	f	g	h	i	j

ⓐ Model
ⓑ 3 section valve
ⓒ Inlet section code
ⓓ Main relief valve settings (210bar)
ⓔ Return section code
ⓕ First section
ⓖ Work section code
ⓗ Drive style code
ⓘ Spool function code
ⓙ Expected flow rate (30L/min)

-O2	-ZS01	-KQ5	-FG2	-QL/30	-O3	-ZS01	-KQ5	-FG3	-QL/30
k	l	m	n	o	p	q	r	s	t

ⓚ 2nd section
ⓛ Work section code
ⓜ Drive style code
ⓝ Spool function code
ⓞ Expected flow rate (30L/min)
ⓟ 3rd section
ⓠ Work section code
ⓡ Drive style code
ⓢ Spool function code
ⓣ Expected flow rate (30L/min)

Notes

The selected valve is GKV35 series. Ordered section valve is a three sectional valve. Inlet relief valve setting pressure is 210 bar. There is no return port on the end section. The first section has two load relief valves on A 、B ports. The section is driven by wire. The spool function is a O type, the required flow is 30L/min. The overload relief is with anti-cavitation function. The second section is also driven by wire. There is no overload relief on either A or B port. The spool function is Y type, the required flow is 30L/min. The third section is driven by hydraulic remote. No overload relief on either A or B port. Spool function is H type, the required flow is 30L/min.

GKV50 Series Sectional Control Valves

20 Introduction
Features 20
21 Technical Data
Performance Data 21-22
23 Operation Principle
Inlet Section Dimensions 24
25 Inlet Section Hydraulic Schematics
Typical Work Section (Main Section) Dimensions 26
27-30 Typical Work Section (Main Section) Hydraulic Schematics
Typical Return Section (End Cap) Dimensions 31
32 Typical Return Section (End Cap) Hydraulic Schematics
Work Section (Main Section) Drive Styles 33
34 Typical Spool Functions
Handle Bracket Types 35
36 Handle Lever Types
Load Relief Valves Types 36
37 Application Example
Ordering Code 38
39 Ordering Example

Introduction of GKV50

GKV50 series sectional valves are open circuit valves. Mainly used in mobile machines such as, agricultural machinery, construction machines, mining equipment, material handling equipment, as well as maintenance machines. All valve series adapted modular design. The system designer can choose different modules to design a complex system. The spool in work section is designed to satisfy with the customer requirements, which provides excellent flow characteristics and very low flow force. With different inlet modules, it gives user the freedom for choosing different relief valve and different port locations. There are numbers of different work section modules to choose to satisfy the customer needs. Different end sections also provide the customer needs for return ports or power beyond functions.

Functions

- Inlet section with pilot relief valve
- Inlet section with direct acting relief valve
- A/B port with overload valve on main section
- A port with overload valve on work section
- B port with overload valve on work section
- A port with check valve
- B port with check valve
- A/B port with a mechanical P. O. check
- A port with a mechanical P. O. check
- B port with a mechanical P. O. check
- End section with oil return port
- End section with power beyond

Features

- Cast iron body (inlet section, main section and end cap).
- Spring cap, mechanical detent cap, as well as electrical or electro-hydraulic pilot controlled module body are made by cast aluminum or die cast aluminum.
- Parallel circuit. Each section has its own load check valve, each section has load relief option and relief style options.
- Can be changed to series circuit.
- Provides dump valve options for each work port.
- Provides different drive modules (electrical, hydraulic remote, manually control, wire driving).
- Provides power beyond.
- Can be modified to be a closed circuit valve.
- Provides mechanical detent.
- Provides options for different type of relief valves and different relief valve locations in the inlet.
- Provides options for mechanically actuated pilot operated check valves to satisfied with the needs for tractors and mobile cranes.
- Provides different spool functions to be used for controlling double acting cylinder , single acting cylinders, hydraulic motors.
- Provides floating functions for spools.
- Provides excellent flow characteristics and small operating force.
- Can be assembled with 1-8 main sections.

Technical Data

Rated flow rate	50L/min	Max. pressure at T port	25bar
Max. flow rate	60L/min	Internal leakage (@70 bar)A, B to T	25-35cc/min
Min. flow rate	20L/min	With P. O. check	2-5cc/min
Max. pressure at P port	350bar	Spool stroke (1, 2 position)	+7/-7mm
Max. pressure at A, B ports	350bar	With floating function (1, 2 and F position)	+7/-7-10mm
Solenoid can be either 12 or 24VDC, corresponding current is 0-1.5 or 0-0.75 Amp.			

Performance Data

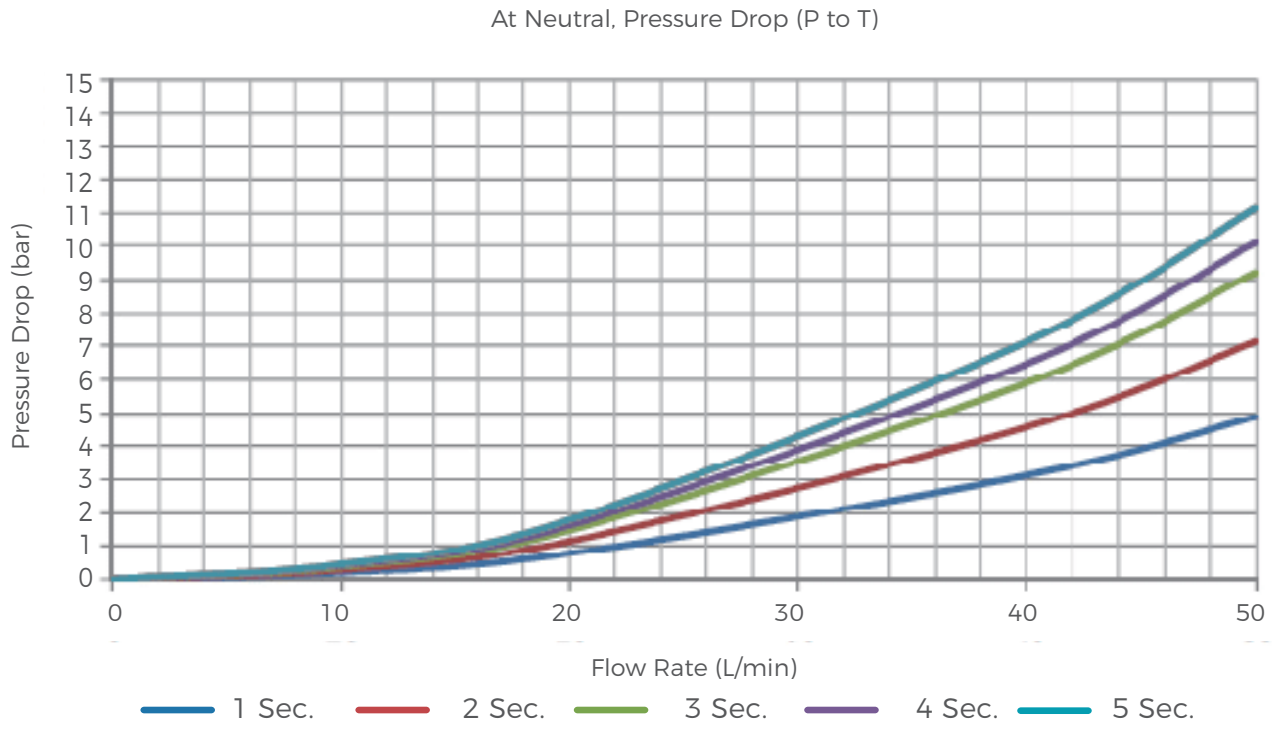

Performance Data

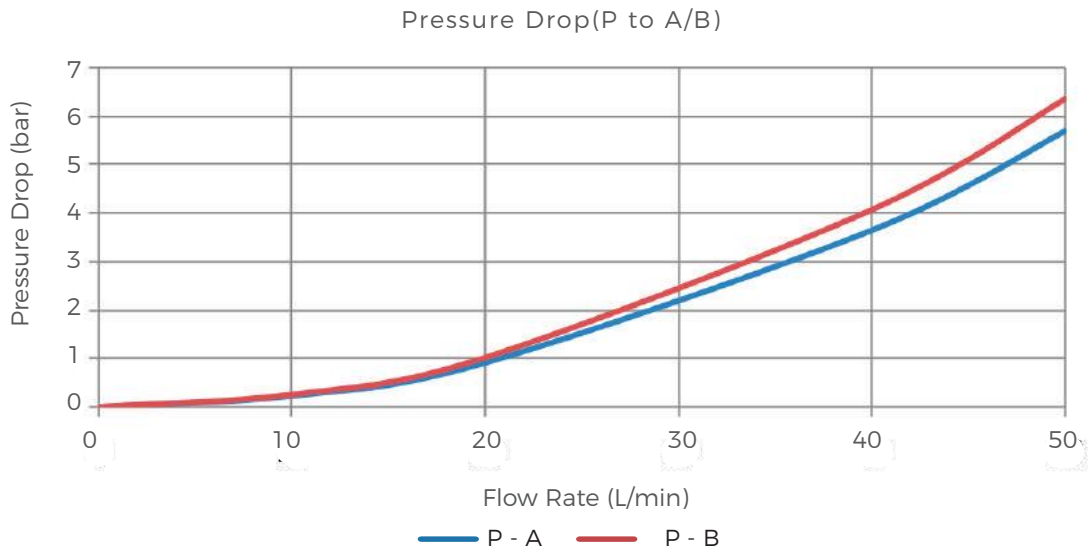

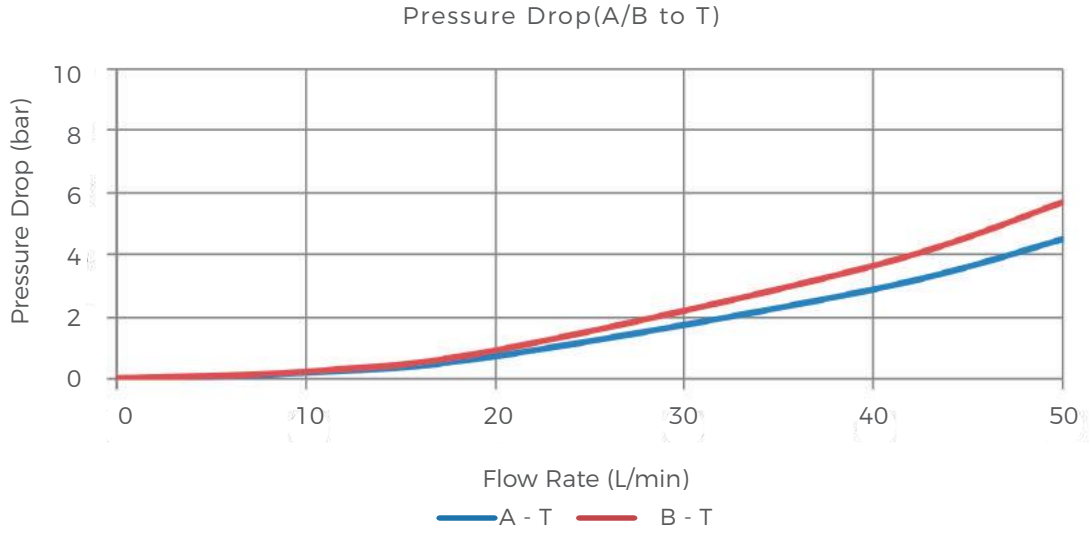

Operation Principle

Drawing 1

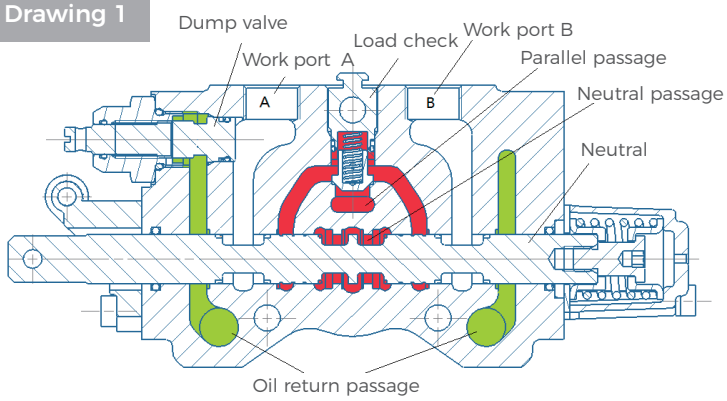

Drawing 2

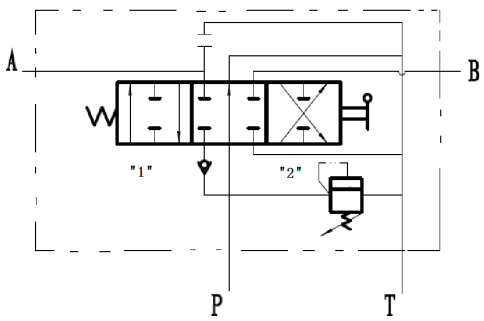

GKV50 series sectional valves is an open circuit 3-position 4-way valve. When spool is in its neutral position, theflow from pump passes through the neutral passage to tank, with small pressure drops. The pressure oil supply through the parallel channel is blocked by the valve core. Like it shows in the drawing 1, the schematic drawing like drawing 2When one of the spool is moved to 1 or 2 position, the neutrapassage is blocked. The flow from pump can only pass the parallel passage to load check valve, then passesthrough the bridge and spool opening to work port A or B.as shown in drawing 3When power beyond function is selected as shown in drawing 4, when all spools are in neutral position, the flowfrom inlet passes neutral passage to power beyond port to provide source of the flow to other auxiliary functions.

Drawing 3

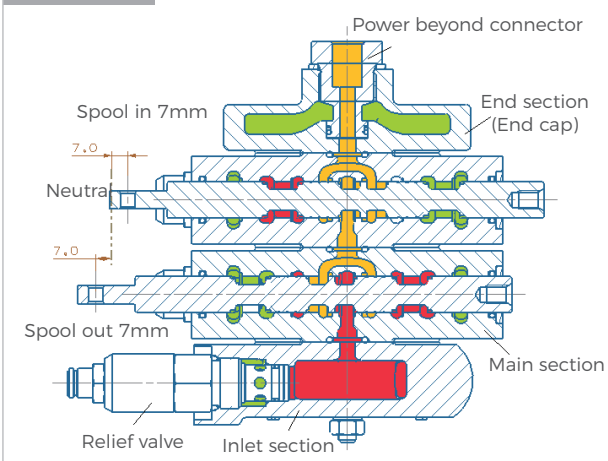

Drawing 4

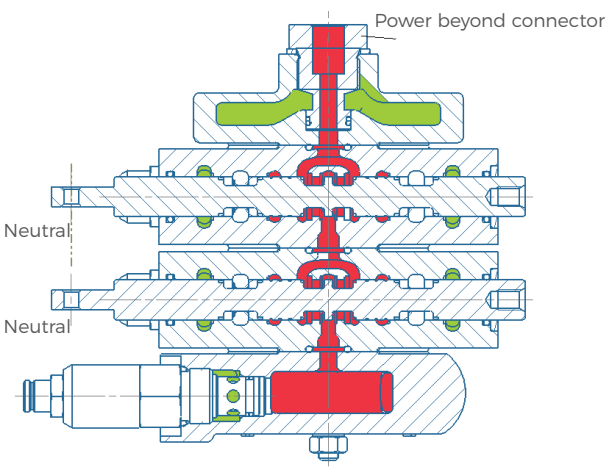

For multi-section valves, if one of the sections spool is in 1 or 2 position, there is no flow in its down streamsec-tions neutral passage. The main throttle occurs on the valve opening between bridge passage and spool. Theop-erator can control more than one spool, but the flow rate for each controlled section depends on the magni tude of the load, as shown in drawing 3.

When power beyond function is selected as shown in drawing 4, when all spools are in neutral position, the flowfrom inlet passes neutral passage to power beyond port to provide source of the flow to other auxiliary functions.

Inlet Section Dimensions

JK01 Inlet Section

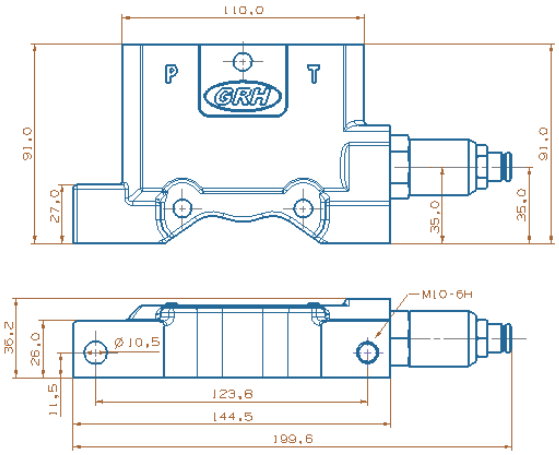

JK02 Inlet Section

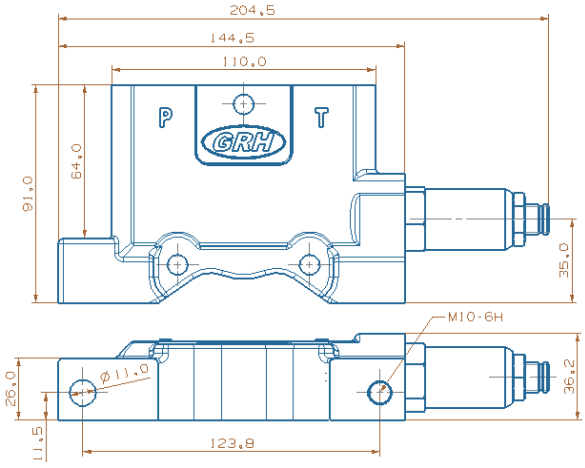

Inlet Section Hydraulic Schematics

Code	Hydraulic Schematic	Main Functions	Notes
JK01	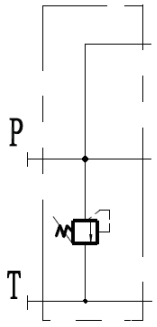	Inlet section with direct acting relief valve	
JK02	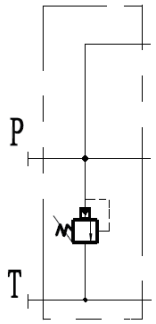	Inlet section with pilot relief valve	

Typical Work Section Dimensions

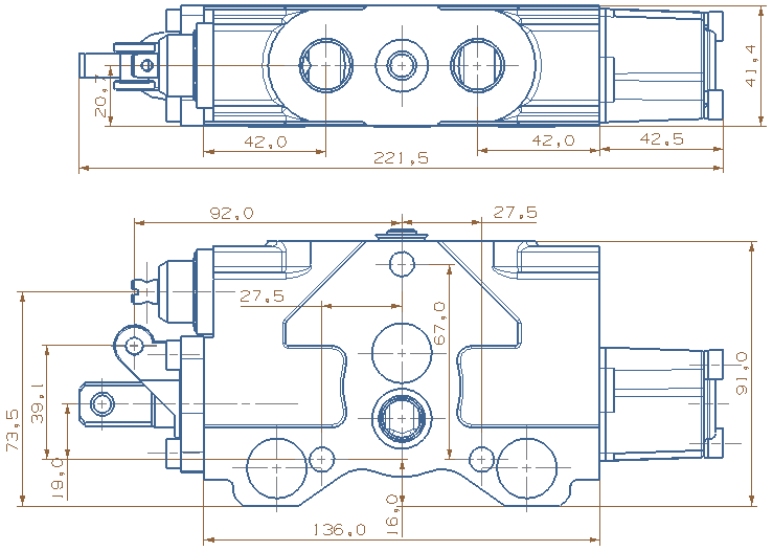

Typical Work Section (Main Section) Dimensions

YT01 Work Section

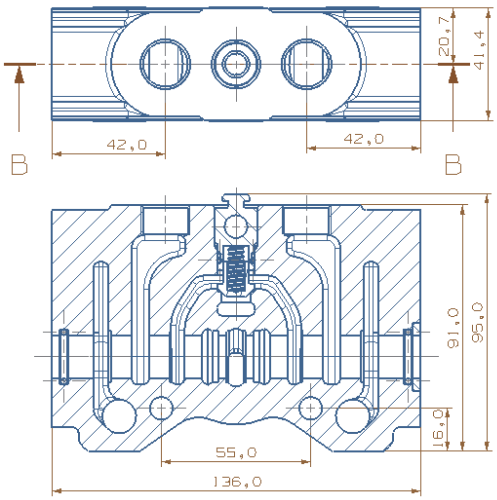

YT06 Work Section

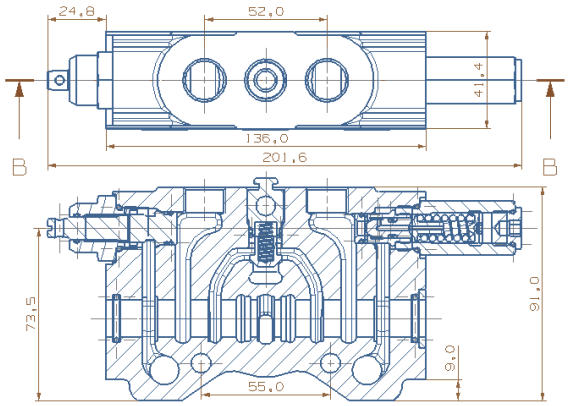

YT07 Work Section

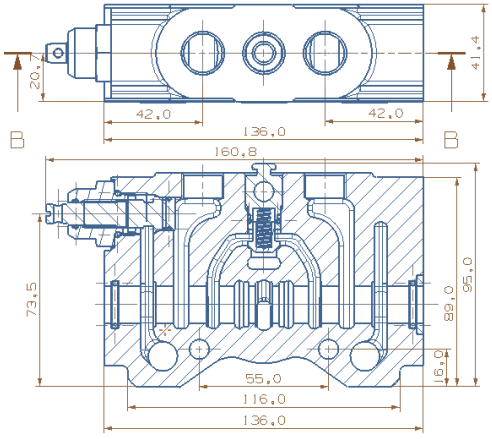

Typical Work Section (Main Section) Hydraulic Schematics

Code	Hydraulic Schematic	Main Functions	Notes
YT01	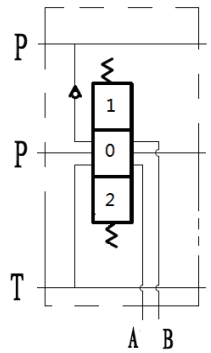	Without overload relief valves at both A and B ports	
YT02	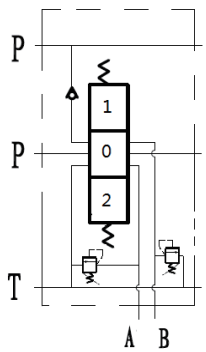	Both A and B ports have overload relief valves	
YT03	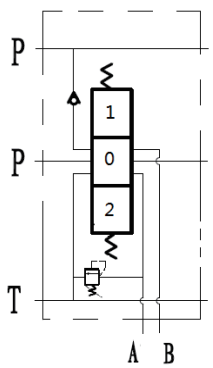	Overload relief valve on A port	
YT04	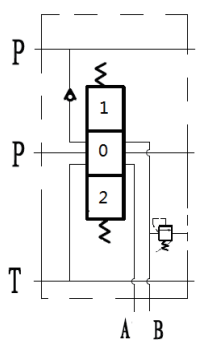	Overload protection relief valve on B port	

Typical Work Section (Main Section) Hydraulic Schematics

Code	Hydraulic Schematic	Main Functions	Notes
YT05	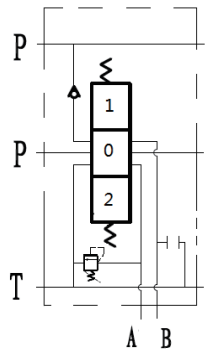	Overload relief valve on A port Globe valve on B port	Tractor and other auxiliary equipment applications
YT06	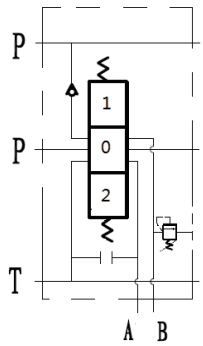	Overload relief valve on B port Globe valve on A port	Tractor and other auxiliary equipment applications
YT07	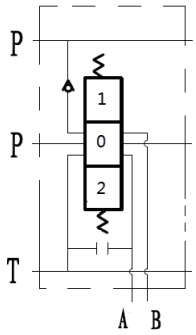	Globe valve on A port	Tractor and other auxiliary equipment applications
YT08	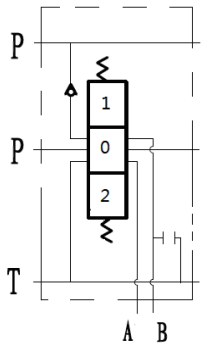	Globe valve on B port	Tractor and other auxiliary equipment applications

Typical Work Section (Main Section) Hydraulic Schematics

Code	Hydraulic Schematic	Main Functions	Notes
YT09	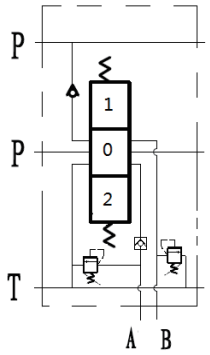	Overload relief valves on both A and B ports. One mechanically actuated P. O. check on A port	Lifting and Locking equipment applications
YT10	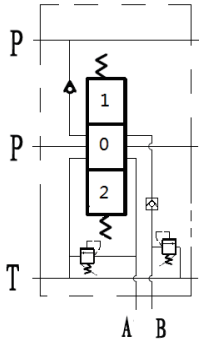	Overload relief valves on both A and B ports. One mechanically actuated P. O. check on B port	Lifting and Locking equipment applications
YT11	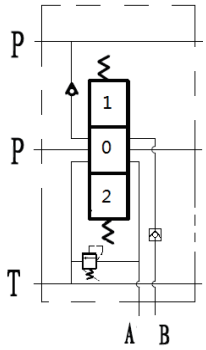	One load relief valves on A port. One mechanically actuated P. O. check on B port	Lifting circuit, lock the heavy duty on a specific height, for example circur for tractor
YT12	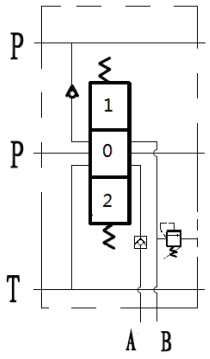	Overload relief valves on B port. One mechanically actuated P. O. check on A port	Lifting circuit, lock the heavy duty on a specific height, for example circur for tractor

Typical Work Section (Main Section) Hydraulic Schematics

Code	Hydraulic Schematic	Main Functions	Notes
YT13	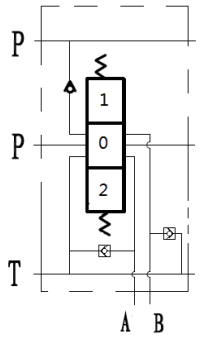	Anti-cavitation valves on both A and B ports	Hydraulic motor applications for avoiding cavitation
YT14	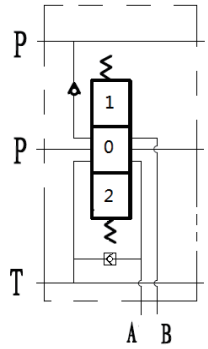	Anti-cavitation valves on A port	Hydraulic motor applications for avoiding cavitation
YT15	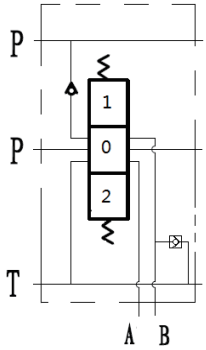	Anti-cavitation valves on B port	Hydraulic motor applications for avoiding cavitation
YT16	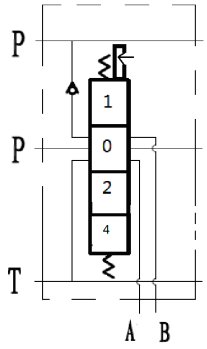	Fourth poisition has mechanical detent	

Typical Return Section (End Cap) Dimensions

DY01 End Section (End Cap)

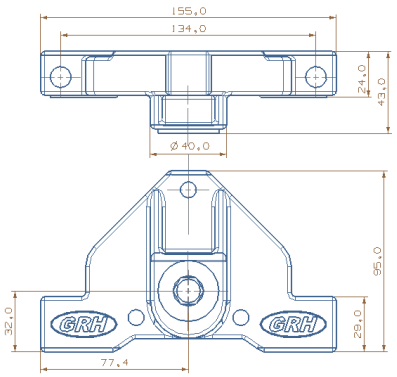

DY02 End Section (End Cap)

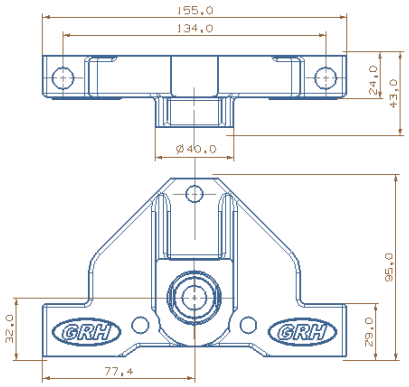

DY03 End Section (End Cap)

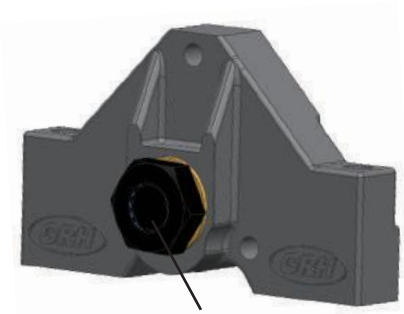

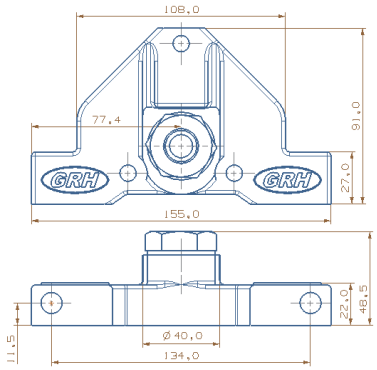

DY04 End Section (End Cap)

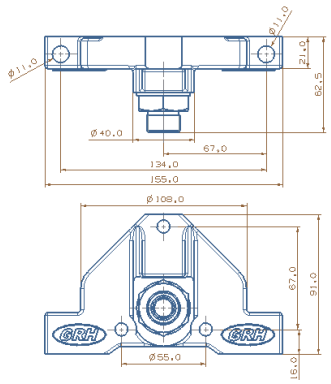

Typical Return Section (End Cap) Hydraulic Schematics

Code	Hydraulic Schematic	Main Functions	Notes
DY01	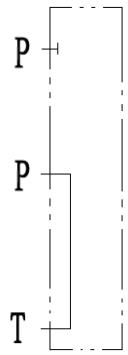	Oil return to tank through end cap to inlet section	
DY02	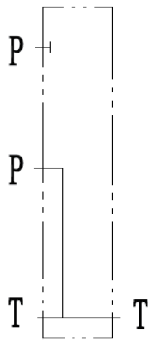	Oil return port on the end section	
DY03	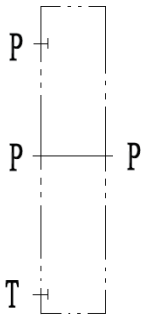	No oil return port with power beyond port (internal thread connector)	Tractor application
DY04	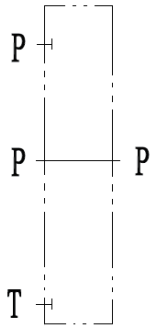	No oil return port with power beyond port (external thread connector)	Tractor application

Work Section (Main Section) Drive Styles

Drive Style Code	Hydraulic Schematic	Functions
KQ1	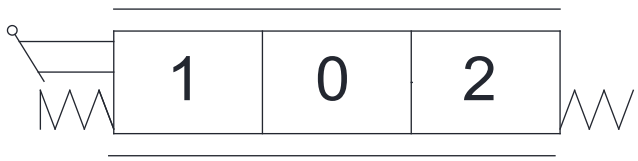	Standard manual control
KQ2	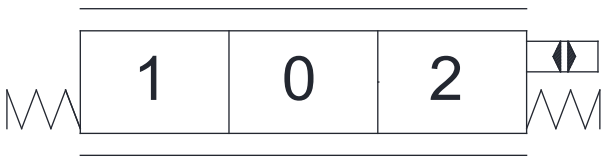	Hydraulic control
KQ3	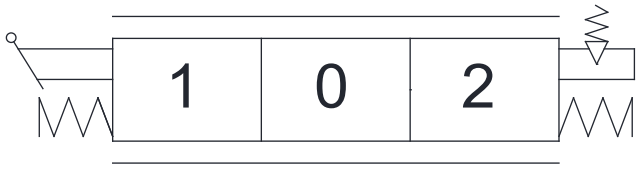	Manual control with mechanical detent
KQ4		Manual control with 4th position floating and detent
KQ5	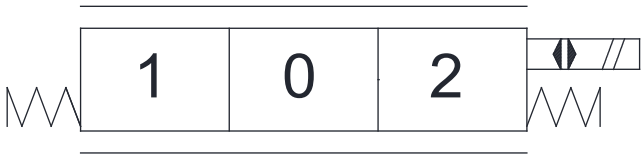	Electrical actuated (on/off)
KQ6	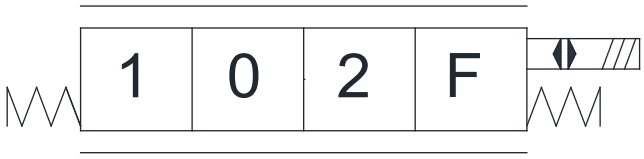	Electrical actuated with floating function

Typical Spool Functions

Drive Style Code	Hydraulic Schematic	Functions	Notes
FG1	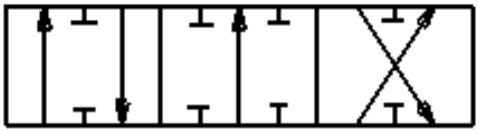	3-position 4-way At neutral: P, T, A, B are all blocked	Double acting cylinder applications
FG2	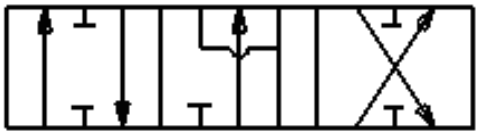	3-position 4-way At neutral: P blocked, T, A, B connected	Hydraulic motor applications
FG3	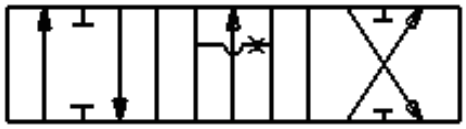	3-position 4-way At neutral: P, A, B and T all connected	Hydraulic motor applications
FG4	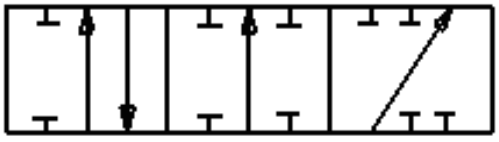	3-position 3-way At neutral: P, T, A, B all blocked	Single acting cylinder applications
FG5	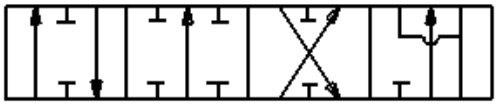	4-position 4-way At neutral: P, T, A, and B are all blocked 4th position floating	Double acting cylinder applications
FG6		4-position 4-way At neutral: P blocked, T, A and B are connected 4th position floating	Double acting cylinder or hydraulic motor applications

Handle Bracket Types

Code	Drawings	Notes
SL0	Valve without handle bracket	
SL1	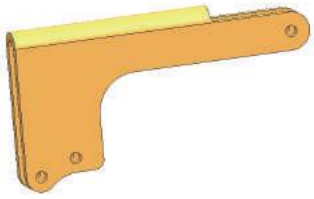	
SL2	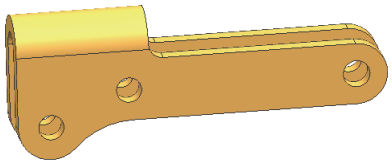	
SL3	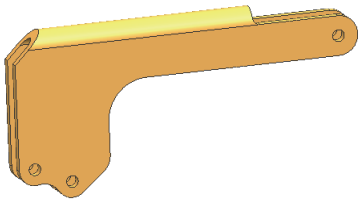	
SL4	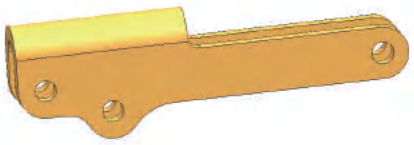	
SL5	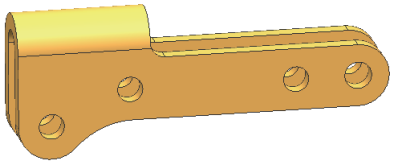	

Handle Types

Code	Drawings	Notes
SB0	No Handle	
SB1		
SB2		
SB3		
SB4		Extended SB1

Overload Relief Valve Types

Code	Drawings	Notes
RF0	No over load relief valve	No over load relief valve
RF1	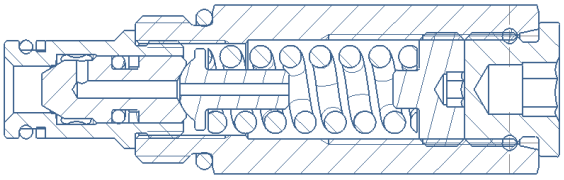	Direct acting relief valve
RF2	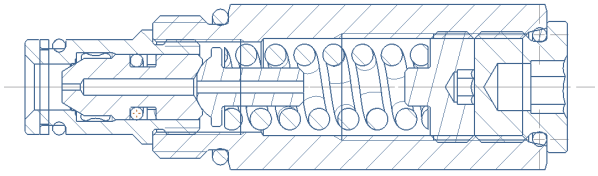	Differential relief valve

Application Example

3 Sections Valve (Third Section Has Mechanical Detent and Floating Function)

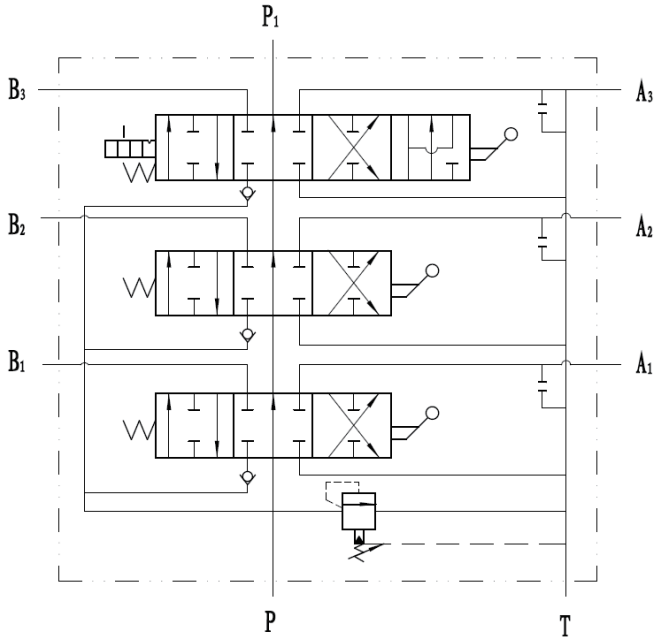

Manual Control 3 Sections Valve

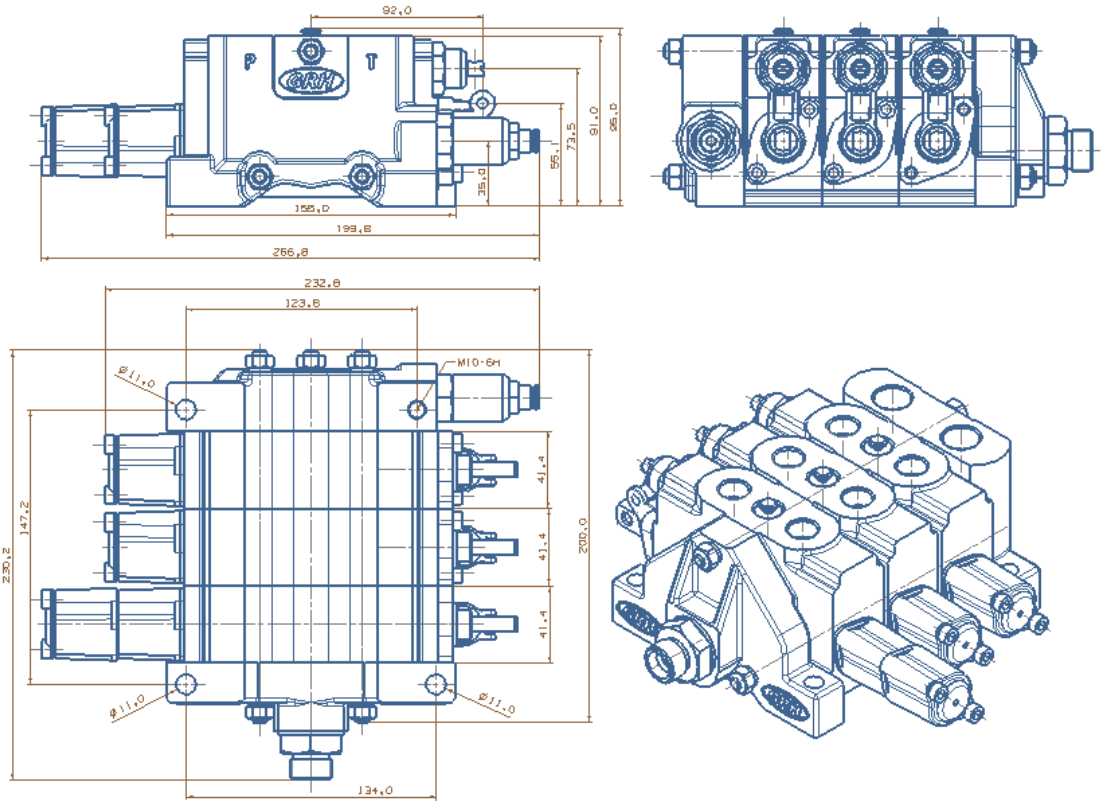

Ordering Code

GKV50	/*	-JY**	/***	-DY**	-O1	-YT**	-KQ*	-FG*	-DC/**	-QL/***	-SL*	-SB*	-RF*
a	b	c	d	e	f	g	h	i	j	k	l	m	n

ⓐ Model
ⓑ Number of sections
ⓒ Inlet section code
ⓓ Main relief valve settings(bar)
ⓔ Return section (end cap) code
ⓕ First section
ⓖ Work section code
ⓗ Drive style code
ⓘ Spool function code
ⓙ Electrical option
12VDC, 24VDC, 00=None electrical
ⓚ Expected flow rate (L/min)
ⓛ Handle bracket code
ⓜ Handle code
ⓝ Overload relief valve code

-O2	-YT**	-KQ*	-FG*	-DC/**	-QL/***	-SL*	-SB*	-RF*	-O3	.....
o	p	q	r	s	t	u	v	w	x	y

ⓞ Second section
ⓟ Work section code
ⓠ Drive style code
ⓡ Spool code
ⓢ Electrical option
12VDC, 24VDC, 00=None electrical
ⓣ Expected flow rate (L/min)
ⓤ Handle bracket code
ⓥ Handle code
ⓦ Overload relief valve code
ⓧ Third section
ⓨ .....

Ordering Example

GKV50	/*	-JY2	/210	-DY1	-O1	-YT01	-KQ1	-FG2	-DC/00	-QL/40	-SL1	-SB1	-RF0
a	b	c	d	e	f	g	h	i	j	k	l	m	n

ⓐ Model
ⓑ Two section valve
ⓒ Inlet section code
ⓓ Main relief valve settings (210bar)
ⓔ Return section (end cap) code
ⓕ First section
ⓖ Work section code
ⓗ Drive style code
ⓘ Spool function code
ⓙ None electrical
ⓚ Expected flow rate (40L/min)
ⓛ Handle bracket code
ⓜ Handle code
ⓝ Overload relief valve code

-O2	-YT03	-KQ2	-FG3	-DC/00	-QL/50	-SL0	-SB0	-RF2
a	b	c	d	e	f	g	h	i

ⓐ Second section
ⓑ Work section code
ⓒ Drive code
ⓓ Spool code
ⓔ No electrical
ⓕ Expected flow rate (50L/min)
ⓖ Handle bracket code (No bracket)
ⓗ Overload relief valve code (Differential type)
ⓘ Handle code (No handle)

Notes

Choose GKV50 series sectional valve, with two work sections, Inlet relief valve is setting is 210 bar. There is no return port on end section of the valve. The first work section is basic standard section without overload relief valves. This section is manual control (wire pulling type). Spool is Y type. Required flow for the first section is 40L/min. Not required for handle and handle bracket. The second section is hydraulic remote control. There is an overload relief on A port. Spool is H type. Required flow is 50L/min. Not required for handle and handle bracket. The overload relief is differential type.

GKV80 Series Sectional Control Valves

41 Introduction
Features 41
42 Technical Data
Performance Data 42-43
44 Operation Principle
Inlet Section Dimensions 45
46 Inlet Section Hydraulic Schematics
Typical Work Section (Main Section) Dimensions 47-48
49-51 Typical Work Section (Main Section) Hydraulic Schematics
Typical Return Section (End Cap) Dimensions 52
53 Typical Return Section (End Cap) Hydraulic Schematics
Work Section (Main Section) Drive Styles 54
55 Typical Spool Functions
Load Relief Valves Types 56
57-58 Application Example
Ordering Code 59
59 Ordering Example

Introduction of GKV80

GKV80 series sectional valves are open circuit valves. Mainly used in mobile machines such as agricultural machinery, construction machines, mining equipment, material handling equipment as well as maintenance machines. All valve series adapt modular design. The system designer can choose different modules to design a complex system. Main valve spool is designed to satisfy with the customer requirements, which provides excellent flow characteristics and very low flow force. With different inlet modules, it gives user the freedom for choosing different relief valve and different port locations. There are numbers of different work section modules to choose to satisfy the customer needs. Different end sections also provide the customer needs for return ports or power beyond functions.

Functions

- Inlet section without pilot supply
- A/B Port with overload relief valve on work section
- A port with overload relief valve on work section
- B port with overload relief valve on work section
- A/B ports with P.O. checks
- A port with P.O. check
- B port with P.O. check
- A port with mechanical P. O. check
- B port with mechanical P. O. check
- End section with oil return port
- End section without oil return port
- End section with power beyond
- Provide other cartridge valve option

Features

- Cast iron body (inlet section, main section and end section).
- Spring cap, mechanical detent cap, as well as electrical or hydraulic pilot controlled module body are made by cast aluminum or die cast aluminum.
- Parallel circuit. Each section has its own load check valve, each section has load relief option and relief style options.
- Can be changed to series circuit.
- Provides check valve options for each work port.
- Provides different drive modules (electrical, hydraulic remote, manually control, wire driving).
- Provides power beyond port.
- Can be modified to be a closed circuit valve.
- Provides mechanical detent and adjustable detent force.
- Provides options for different relieves and different relief valve locations in the inlet.
- Provides options for P. O. check valve for each work port.
- Provides options for mechanically actuated pilot operated check valves to satisfied with the needs for tractors and mobile cranes.
- Provides different spool functions to be used for controlling double acting cylinder , single acting cylinders, hydraulic motors.
- Provides floating functions for spools.
- Provides excellent flow characteristics and small operating force.
- Can be proportionally controlled without pressure compensation.
- Can be assembled with 1-8 work sections.

Technical Data

Rated flow rate	80L/min	Max. pressure at T port	25bar
Max. flow rate	100L/min	Internal leakage (@70 bar)A, B to T	＜8cc/min
Min. flow rate	20L/min	With pilot operating check	＜3cc/min
Max. pressure at P port	350bar	Spool stroke (1, 2 position)	+7/-7mm
Max. pressure at A, B port	350bar	With floating function (1, 2 and F position)	+7/-7-10mm
Solenoid can be either 12 or 24VDC, corresponding current is 0-1.5 or 0-0.75 Amp.			

Performance Data

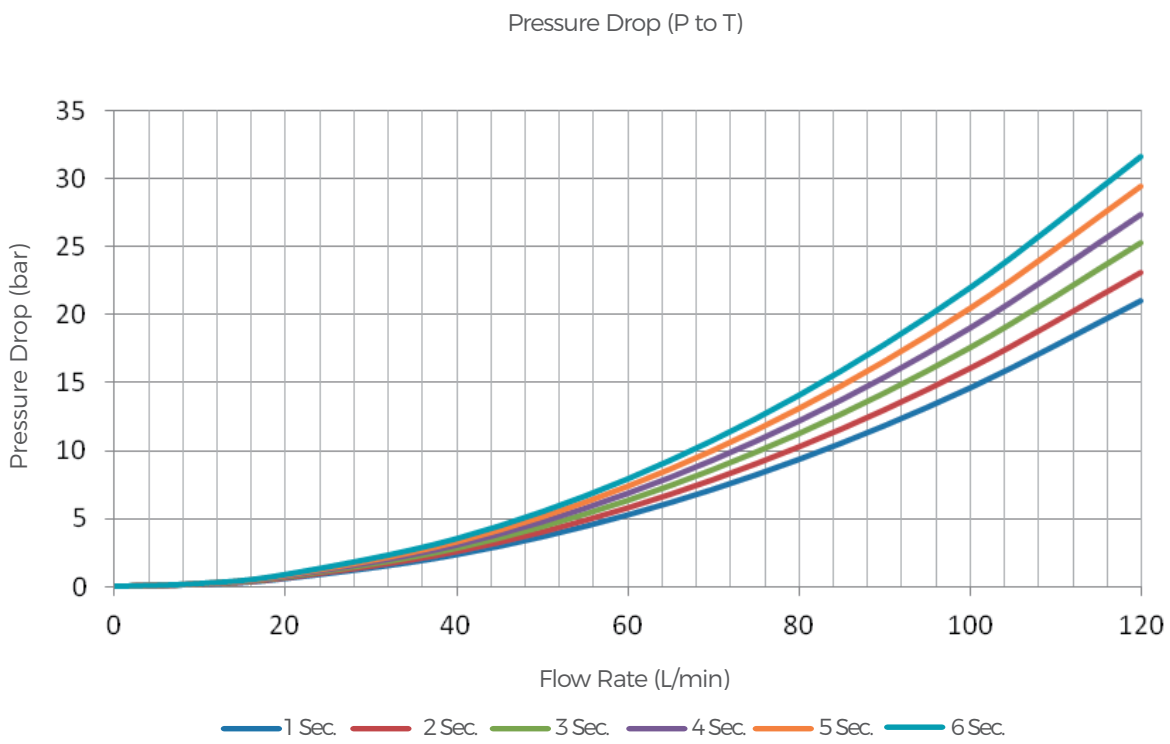

Performance Data

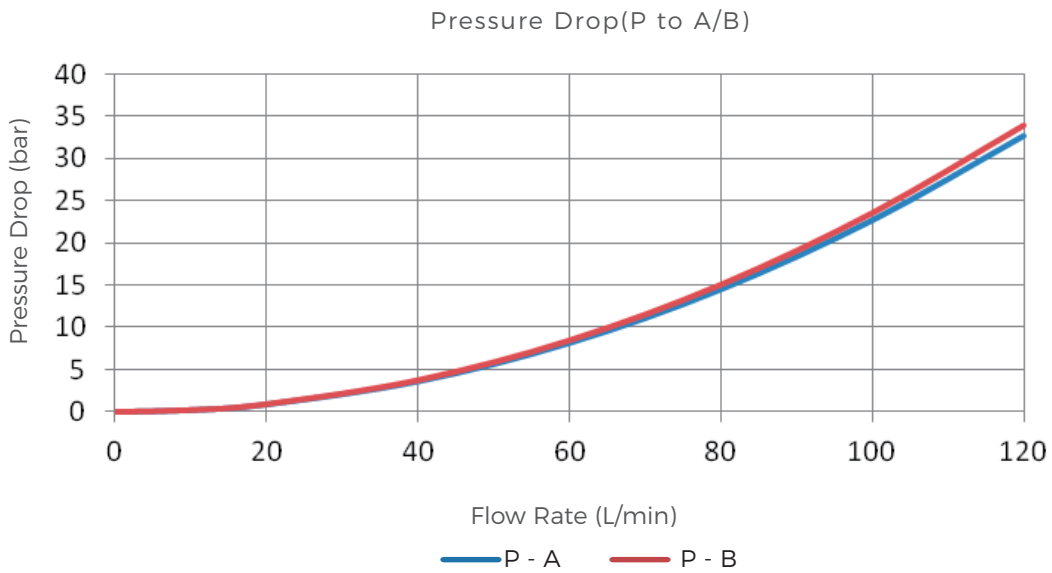

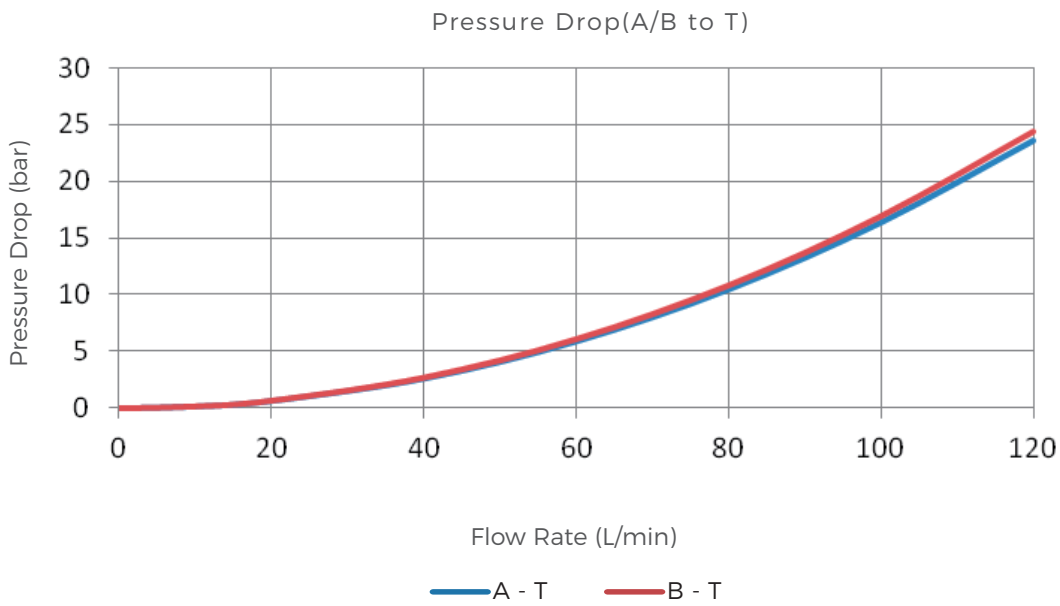

Operation Principle

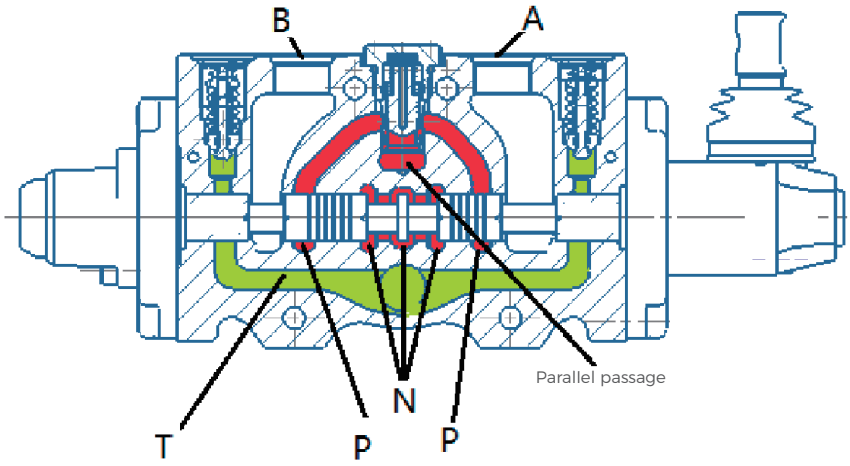

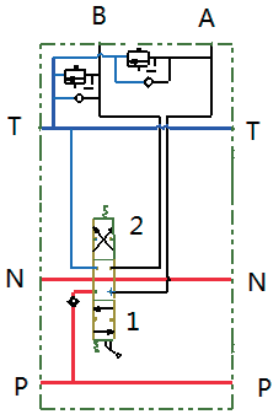

GKV80 series sectional valve is an open circuit 3-position 4-way valve. When spool is in its neutral position, the flow from pump passes through the neutral passage to tank, with very low pressure drop. When one of the spool is moved to 1 or 2 position, the neutral passage is blocked. The flow from pump can only pass though parallel passage to load check valve, go through the bridge and spool opening to work port A or B.

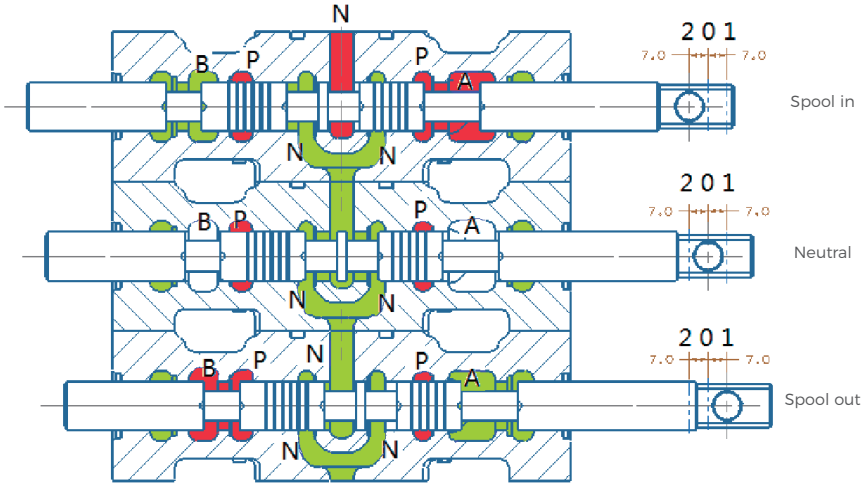

For multi-section valves, if one of the section spool is in 1 or 2 position, there is no flow in its down stream section neutral passage. The main throttle occurs on the valve opening between bridge passage and spool. The operator can control more than one spools, but the flow rate for each controlled section is dependent on the load.

Inlet Section Dimensions

JK01 Inlet Section

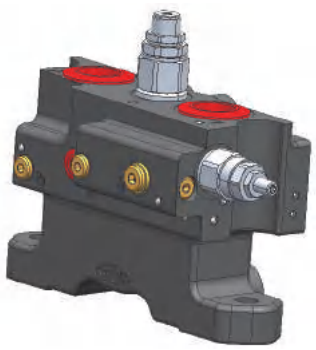

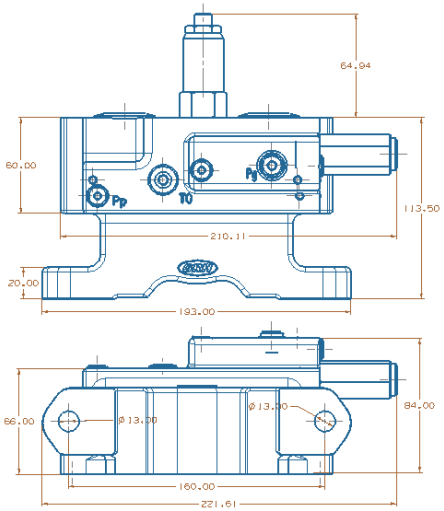

JK02 Inlet Section

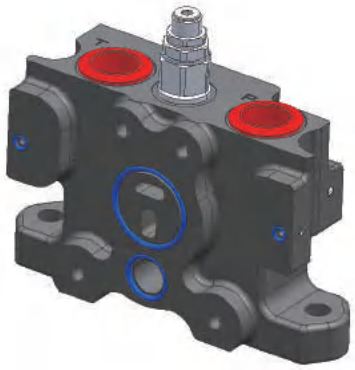

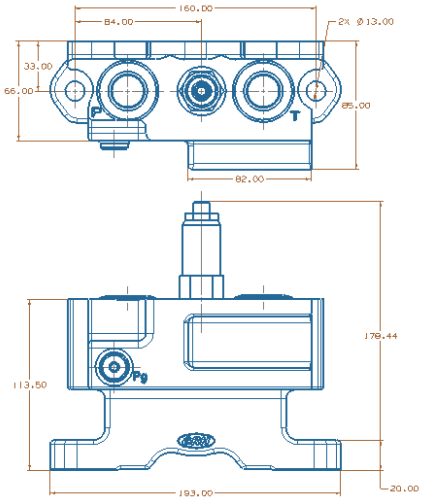

JK03 Inlet Section

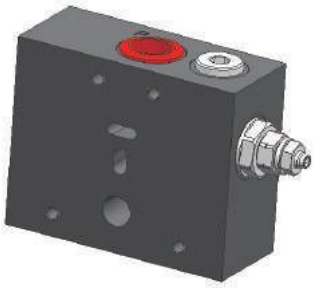

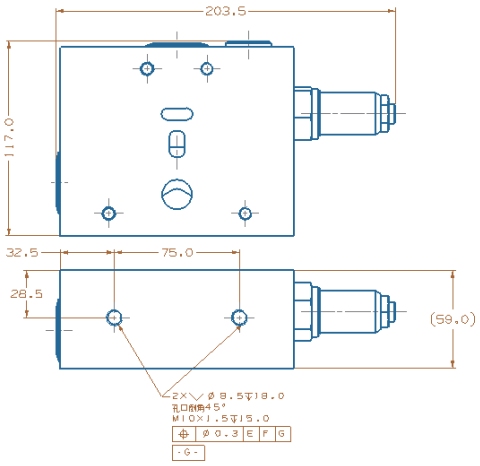

Inlet Section Hydraulic Schematics

Code	Hydraulic Schematic	Main Functions	Notes
JK01	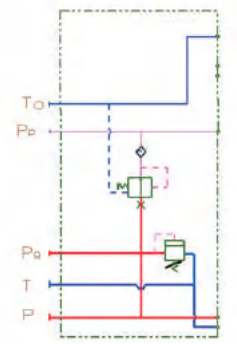	Inlet section with pilot supply	
JK02	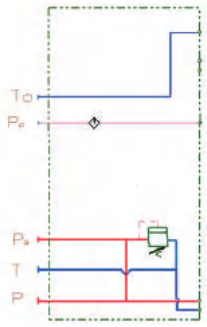	Inlet section without pilot supply	
JK03	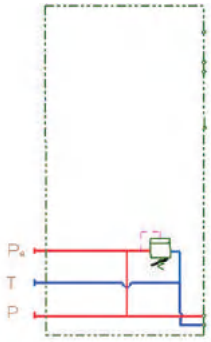	Basic inlet	

Typical Work Section (Main Section) Dimensions

ZK01 Work Section

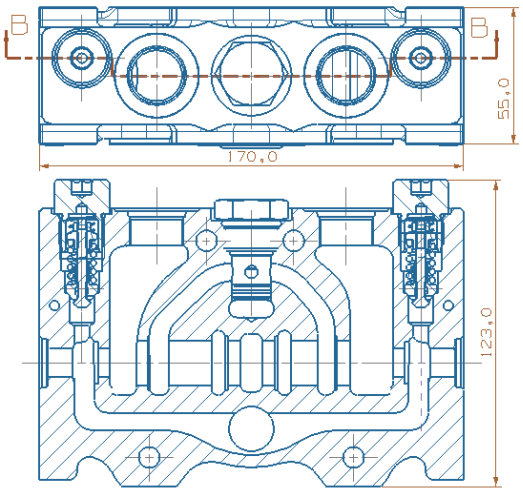

ZK05 Work Section

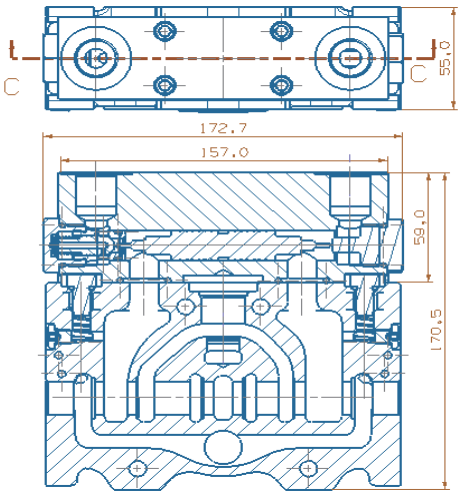

ZK07 Work Section

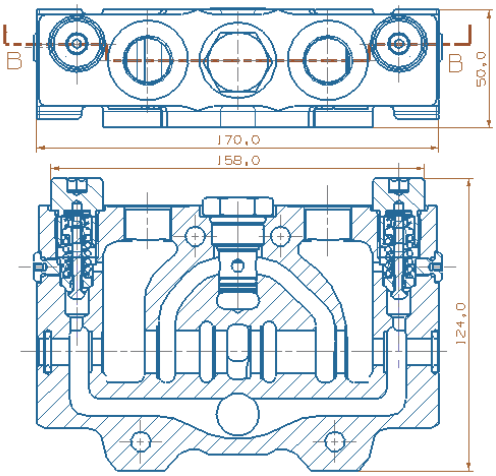

Typical Work Section (Main Section) Dimensions

ZK08 Work Section

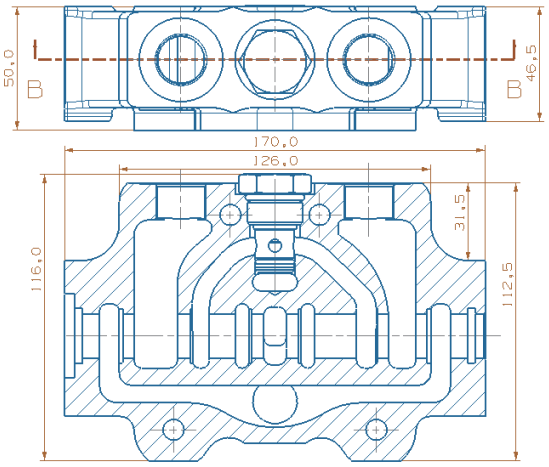

ZK10 Work Section

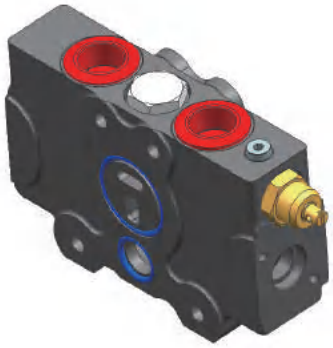

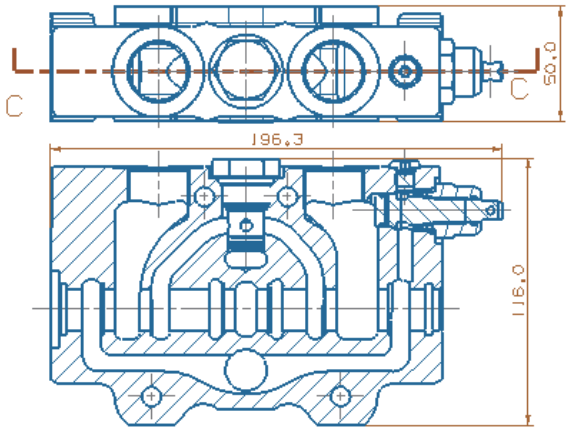

ZK11 Work Section

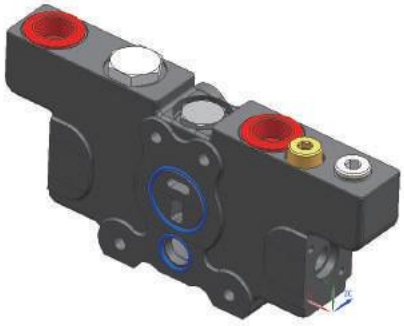

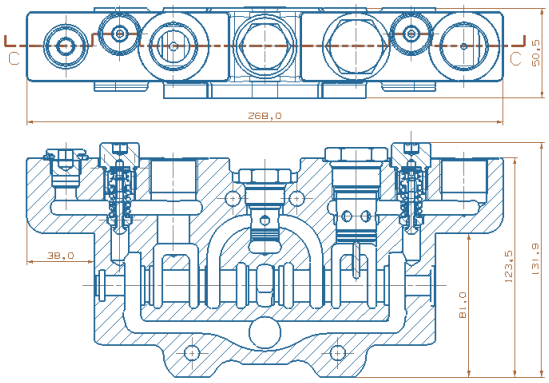

Typical Work Section (Main Section) Hydraulic Schematics

Code	Hydraulic Schematic	Main Functions	Notes
ZK01	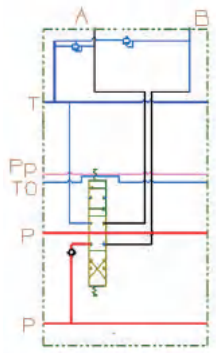	Load relief valves at both A and B ports	
ZK02	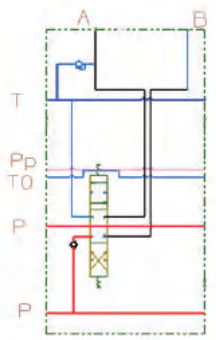	Load relief valve at A port	
ZK03	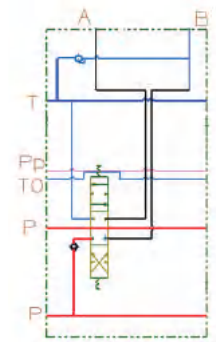	Load relief valve at B port	
ZK04	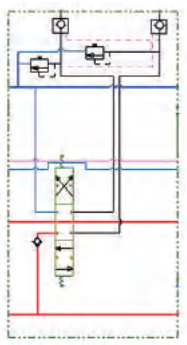	Load relief valves and PO check at both A and B ports	

Typical Work Section (Main Section) Hydraulic Schematics

Code	Hydraulic Schematic	Main Functions	Notes
ZK05	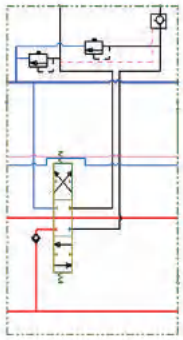	Load relief valves at both A and B ports and P. O. check at B port	
ZK06	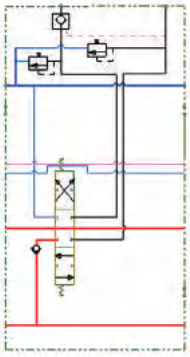	Load relief valves at both A and B ports and P. O. check at A port	
ZK07	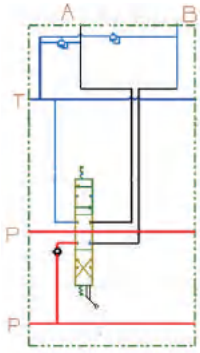	Load relief valves at both A and B ports and manual control (Section thickness is 50mm)	
ZK08	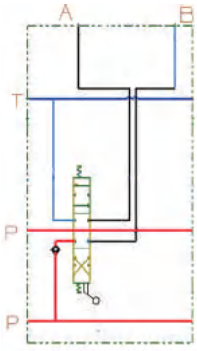	Basic Work Section manual control (section thickness is 50mm)	

Typical Work Section (Main Section) Hydraulic Schematics

Code	Hydraulic Schematic	Main Functions	Notes
ZK09	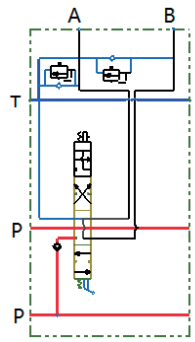	Load relief valves and anti-air suction valvesat both A and B ports and manual control 4th position floating (section thickness is 50mm)	
ZK10	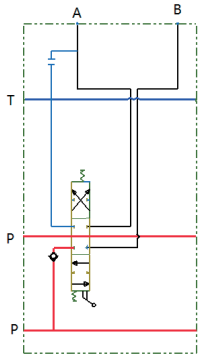	Basic work section manual control Check valve at A port (section thickness is 50mm)	Agricultural tractor auxiliary applications
ZK11	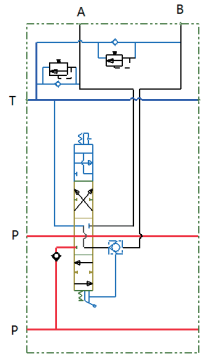	manual control 4th position floating Load relief valves and anti-cavitation valves at both A and B ports Mechanically operated P. O. check at B port (section thickness 50mm)	Lifting circuit, lock the heavy duty on a specific height, for example circur for tractor
ZK12	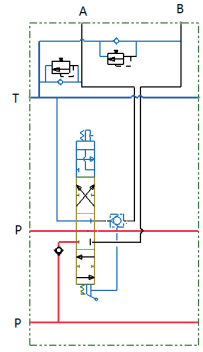	Manual control 4th position floating Load relief valves and anti-cavitation valves at both A and B ports Mechanically operated P. O. check at A port (section thickness 50mm)	Lifting circuit, lock the heavy duty on a specific height, for example circur for tractor

Typical Return Section (End Cap) Dimensions

DK01 Return Section (End Cap)

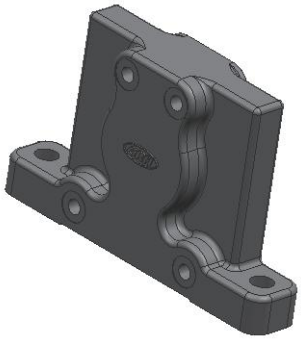

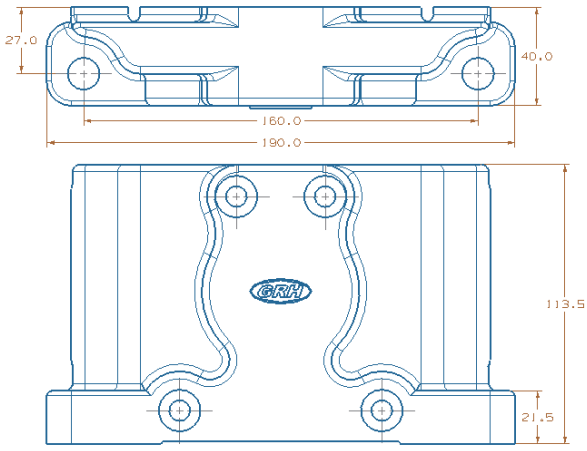

DK02 Return Section (End Cap)

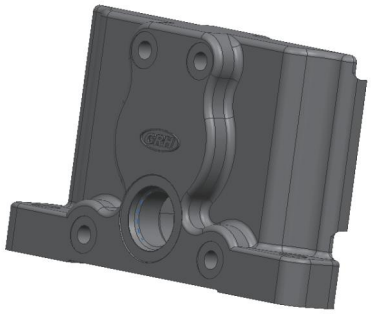

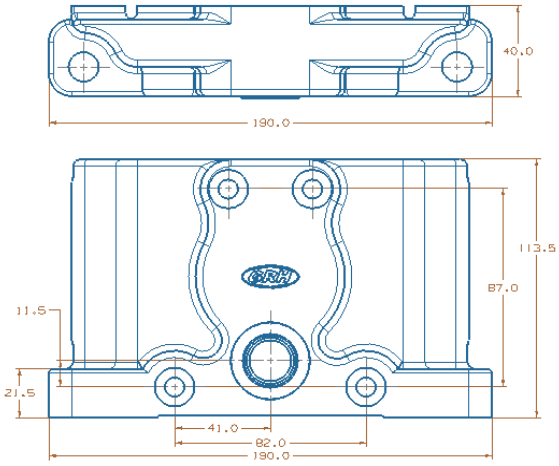

DK03 Return Section (End Cap)

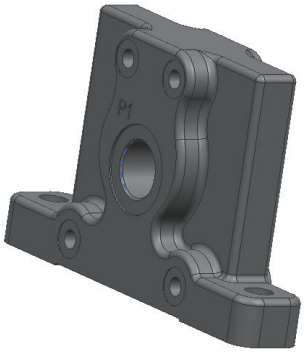

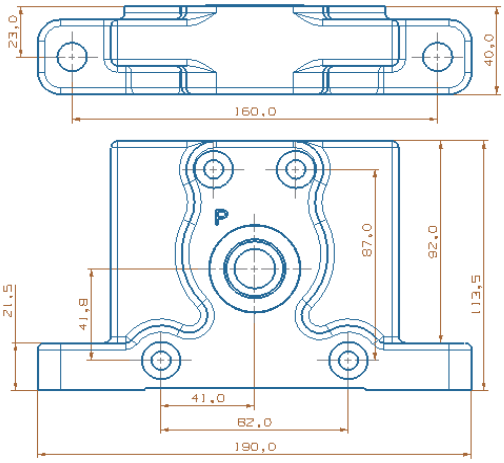

Typical Return Section (End Cap) Hydraulic Schematics

Code	Hydraulic Schematic	Main Functions	Notes
DK01	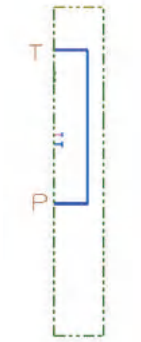	End section without T port	
DK02	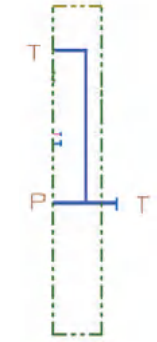	End section with T port	
DK03	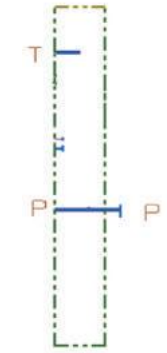	End section with power beyond port	Tractor applications

Work Section (Main Section) Drive Styles

Drive Style Code	Hydraulic Schematic	Functions
KQ1	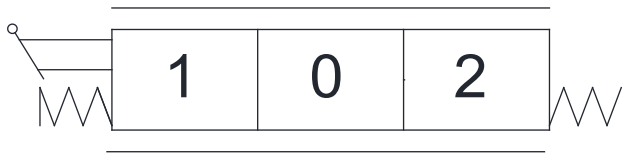	Standard manual control
KQ2	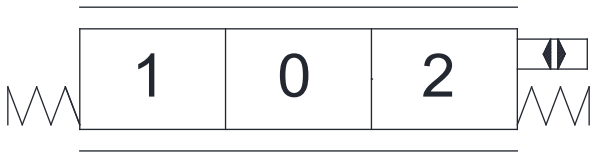	Hydraulic remote control
KQ3	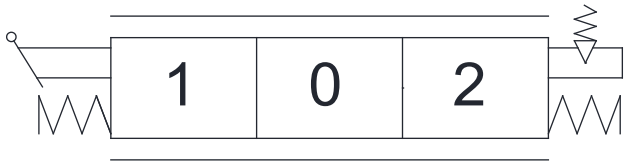	Manual control with mechanical detent
KQ4		Manually controlled with 4th position floating and detent
KQ5	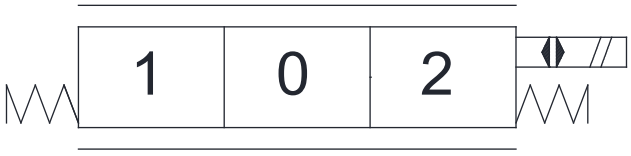	Electrical actuated (on/off)
KQ6		Electrical actuated with floating function
KQ7	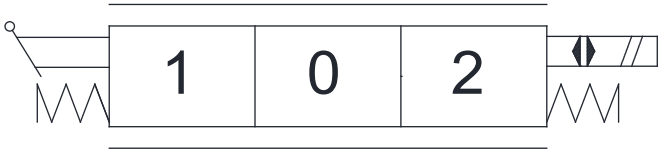	Electrical control (on/off control with option of manual control)

Typical Spool Functions

Drive Style Code	Spool Type	Functions	Notes
FG1	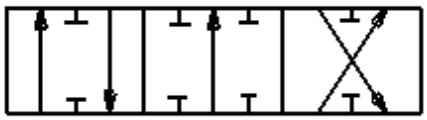	3-position 4-way At neutral: P, T, A, B are all blocked	Double acting cylinder applications
FG2	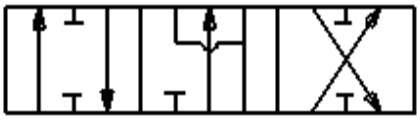	3-position 4-way At neutral: P blocked, T, A, B connected	Hydraulic motor applications
FG3	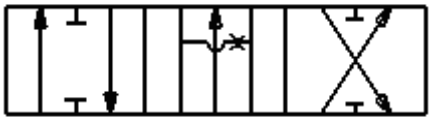	3-position 4-way At neutral: P, A, B and T all connected	Hydraulic motor applications
FG4	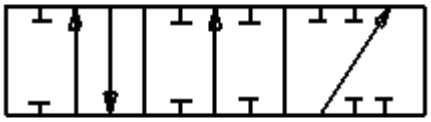	3-position 3-way At neutral: P, T, A, B all blocked	Single acting cylinder applications
FG5	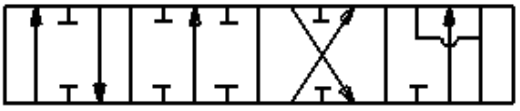	4-position 4-way At neutral: P, T, A, and B are all blocked 4th position floating	Double acting cylinder applications
FG6		4-position 4-way At neutral: P blocked, T, A and B are connected 4th position floating	Double acting cylinder or hydraulic motor applications

Load Relief Valve Types

Code	Section drawing	Notes
RF0	Without load relief valve	Without load relief valve
RF1	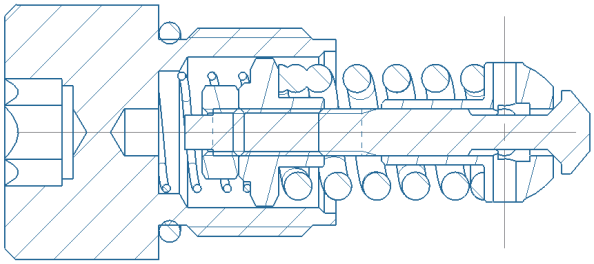	Relief valve with anti-cavitation function
RF2	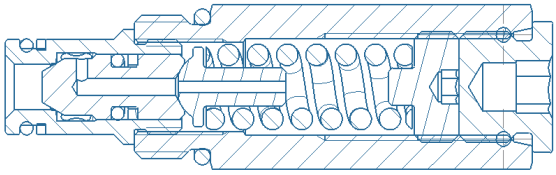	Direct acting relief valve
RF3	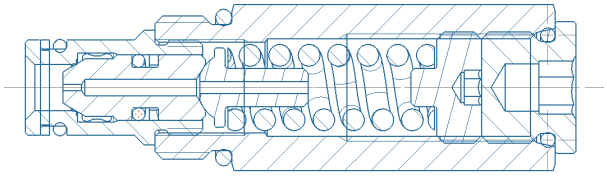	Differential pressure relief valve

Application Example

Electro-hydraulic Controlled with Manual Override

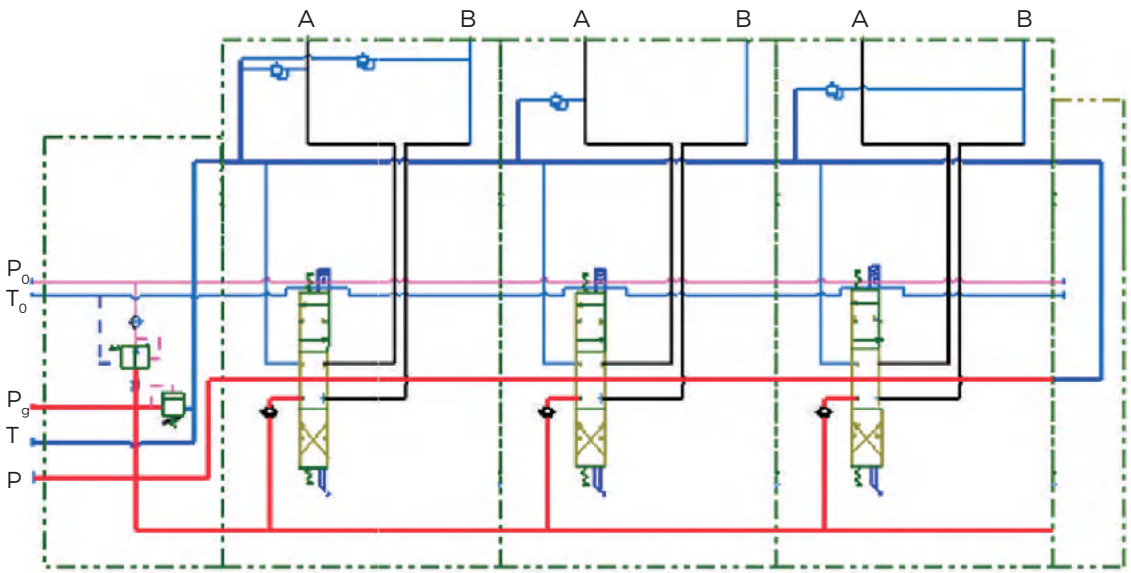

2 Sections Valve

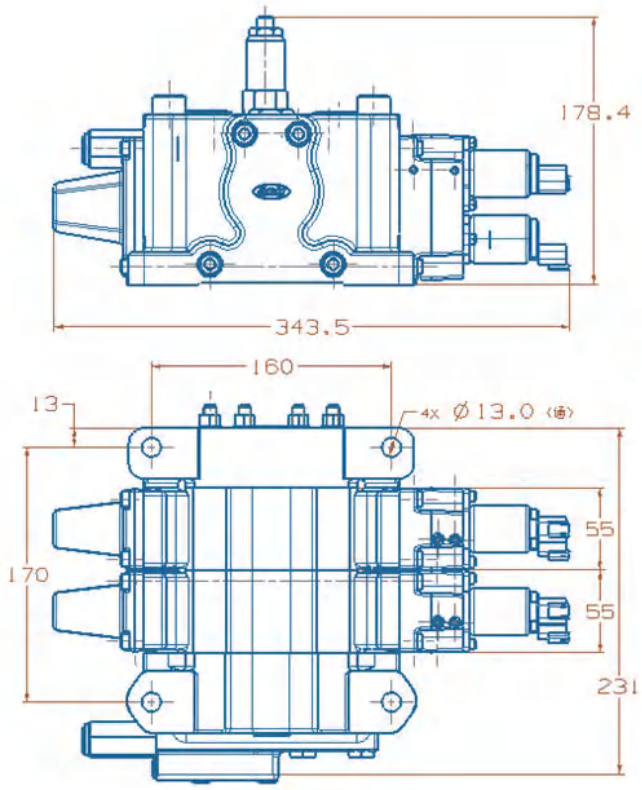

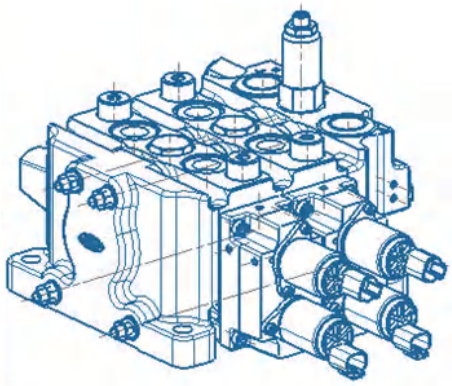

Application Example

Manual Control Valve with Two Secions of Floating Function (Tractor Hydraulic System)

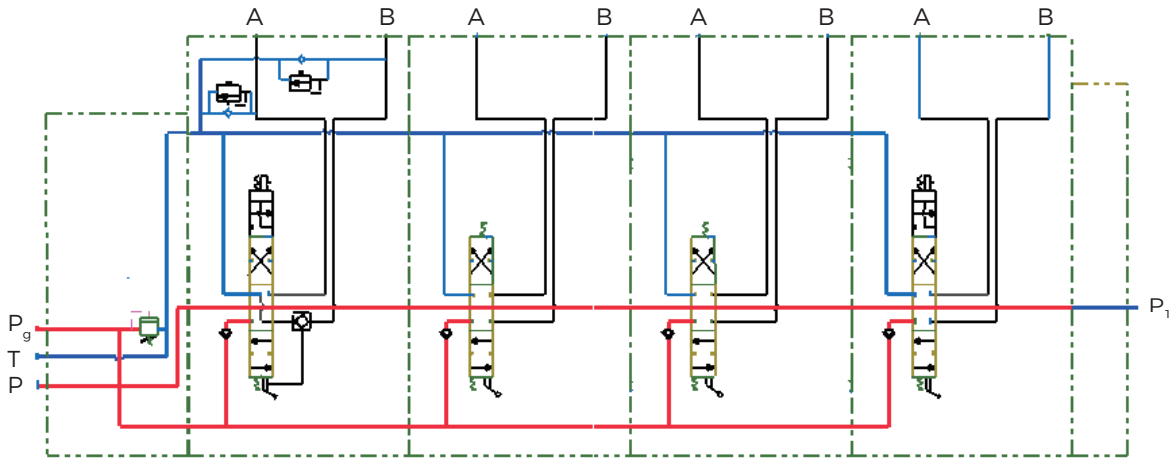

4 Sections Valve

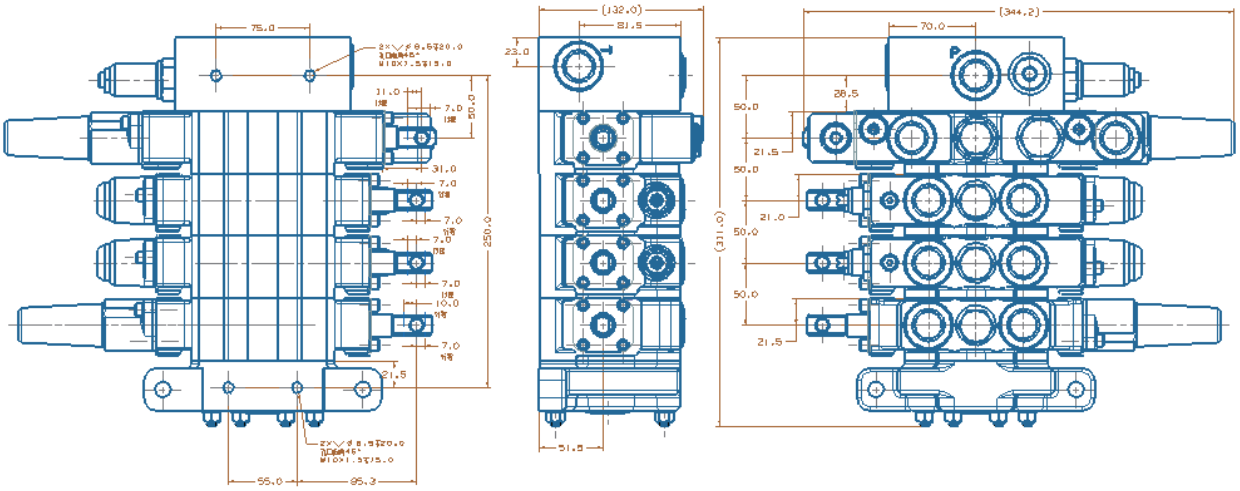

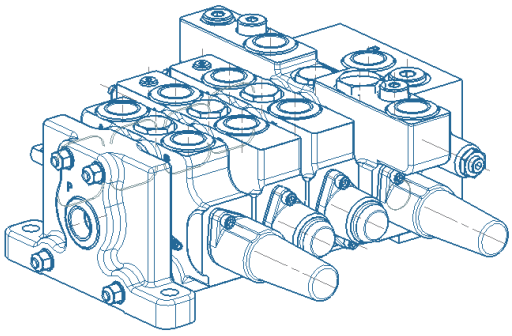

Ordering Code

GKV80	-*	-JK**	/***	-DK**	-O1	-ZK**	KQ*	-FG*	-DC/**	-QL/***	-RF*	-O2	...
a	b	c	d	e	f	g	h	i	j	k	l	m	n

ⓐ Model
ⓑ Number of sections
ⓒ Inlet section code
ⓓ Main relief valve settings (bar)
ⓔ Return section (end cap) code
ⓕ First section
ⓖ Work section code
ⓗ Drive style code
ⓘ Spool function code
ⓙ Electrical option
12VDC, 24VDC, 00=None electrical
ⓚ Expected flow rate (L/min)
ⓛ Load relief valve style
ⓜ Second section
ⓝ .....

Ordering Example

GKV80	-3	-JK01	/210	-DK01	-O1	-ZK02	-KQ5	-FG1	-DC/12	-QL/100	-RF1
a	b	c	d	e	f	g	h	i	j	k	l

ⓐ Model
ⓑ Three sections
ⓒ Inlet section code
ⓓ Main relief valve settings (210bar)
ⓔ Return ection code
ⓕ First section
ⓖ Work section code
ⓗ Drive style code
ⓘ Spool function code
ⓙ 12VDC
ⓚ Expected flow rate (100L/min)
ⓛ Load relief valve with anti-cavitation

-O2	-ZK01	-KQ1	-FG2	-DC/00	-QL/100	-RF2
m	n	o	p	q	r	s

ⓜ Second section
ⓝ Work section code
ⓞ Drive style code
ⓟ Spool function code
ⓠ No electrical
ⓡ Expected flow rate (100L/min)
ⓢ Load relief valve style (Direct acting)

-O3	-ZK01	-KQ2	-FG3	-DC/12	-QL/80	RF3
t	u	v	w	x	y	z

ⓣ Third section
ⓤ Work section code
ⓥ Drive style code
ⓦ Spool function code
ⓧ 12VDC
ⓨ Expected flow rate (80L/min)
ⓩ Load relief valve with anti-cavitation

Notes

Ordered valve is GKV80 series with 3 work sections. Inlet relief setting pressure is 210 bar. End section has no T port. In the first work section, there is a load relief valve in A port. The spool of this section is driven by electrical drive module with 12VDC. The spool function is O function. Required flow rate is 100L/min. The load relief has an anti-cavitation function. The second work section is manually controlled. There are load relief valves on both A and B ports. Spool function is Y function. Required flow is 100L/min. Load relief is a direct acting relief. The third section is hydraulic remote controlled. There are load relief valves on both A and B ports. The spool function is H function. Required flow is 80L/min.The load relief valves are differential pressure type.

GKVL80 Series Sectional Control Valves

61 Introduction

Features 61

62 Technical Data

Performance Data 62

63 Operation Principle

Inlet Section Dimensions 64

64 Inlet Section Hydraulic Schematics

Typical Work Section (Main Section) Dimensions 65

66 Typical Work Section (Main Section) Hydraulic Schematics

Typical Return Section (End Cap) Dimensions 67

67 Typical Return Section (End Cap)Hydraulic Schematics

Work Section (Main section) Drive Styles 68

68 Typical spool Functions

Application Example 69

70 Ordering Code

Ordering Example 70

Introduction of GKVL80

GKVL80 series sectional valves are open circuit valves. Mainly used in mobile machines such as agricultural machinery, construction machines, mining equipment, material handling equipment as well as maintenance machines. All valve series adapt modular design. The system designer can choose different modules to design a complex system. Main valve spool is designed to satisfy the customer requirements, which provides excellent flow characteristics and very low flow force. With different inlet modules, it gives user the freedom for choosing different relief valve and different port locations. There are numbers of different work section modules to choose to satisfy the customer needs. Different end sections also can meet different customer needs for return ports or power beyond functions.

Functions

- Inlet section without pilot supply
- A/B Port with overload relief valve on work section
- A port with overload relief valve on work section
- B port with overload relief valve on work section
- A port with P.O. check
- End section with oil return port
- End section without oil return port
- End section with power beyond
- Provide other cartridge valve option

Features

- Cast iron body (inlet section, main section and end section).
- Spring cap, mechanical detent cap, as well as electrical or hydraulic pilot controlled module body are made by cast aluminum or die cast aluminum.
- Parallel circuit. Each section has its own load check valve, each section has load relief option and relief style options.
- Can be changed to series circuit.
- Provides dump valve options for each work port.
- Provides different drive modules (electrical, hydraulic remote, manually control, wire driving).
- Provides power beyond port.
- Can be modified to be a closed circuit valve.
- Provides mechanical detent.
- Provides options for different relieves and different relief valve locations in the inlet.
- Provides options for pilot operated check valve for each work port.
- Provides options for mechanically actuated pilot operated check valves to satisfied with the needs for tractors and mobile cranes.
- Provides different spool functions to be used for controlling double acting cylinder, single acting cylinders, hydraulic motors.
- Provides floating functions for spools.
- Provides excellent flow characteristics and small operating force.
- Small size, light weight.
- Can be proportionally controlled without pressure compensation.
- Can be assembled with 1-8 work sections.

Technical Data

Rated flow rate	80L/min	Maximum pressure at T port	25bar
Max. flow rate	90L/min	Internal leakage (@70 bar) A, B to T	35cc/min
Min. flow rate	20L/min	Internal leakage (@70 bar) A, B to T with P. O. check	<3cc/min
Max. pressure at P port	315bar	Spool stroke (1, 2 position)	+7/-7mm
Max. pressure at A, B port	315bar	With floating function	+6/-10mm
Solenoid can be either 12 or 24VDC, corresponding current is 0-1.5 or 0-0.75 Amp.			

Performance Data

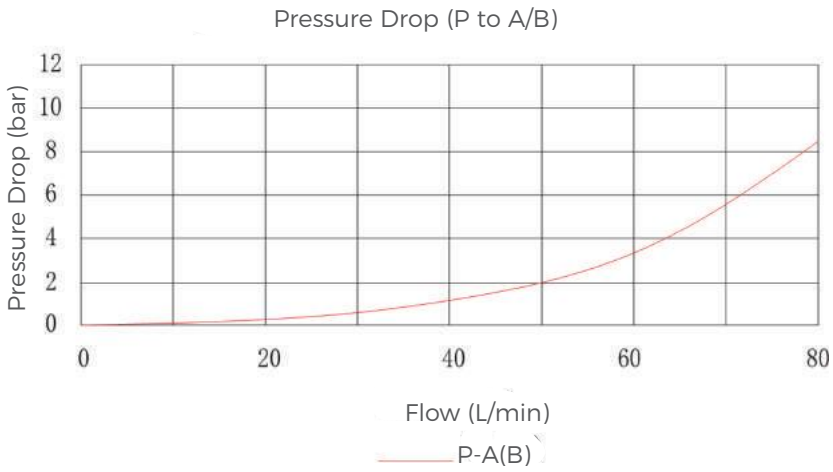

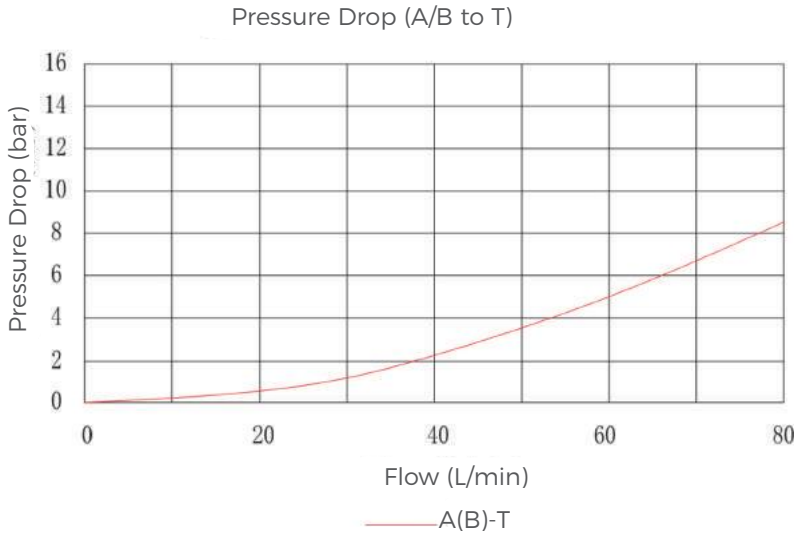

Operation Principle

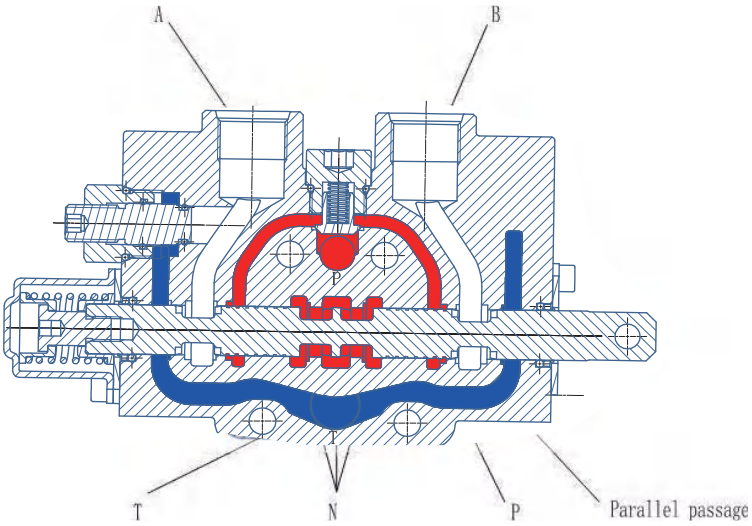

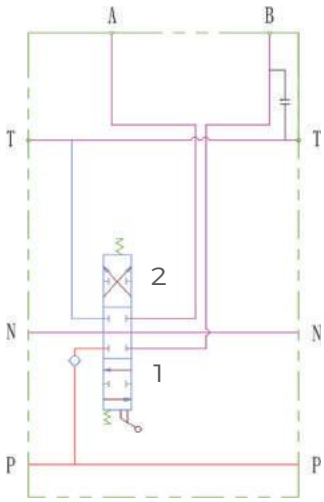

GKVL80 series sectional valve is an open circuit 3-position 4-way valve. When spool is in its neutral position, the flow from pump passes through the neutral passage to tank, with very low pressure drop. When one of the spool is moved to 1 or 2 position, the neutral passage is blocked. The flow from pump can only pass though parallel passage to load check valve, then go through the bridge and spool opening to work port A or B.

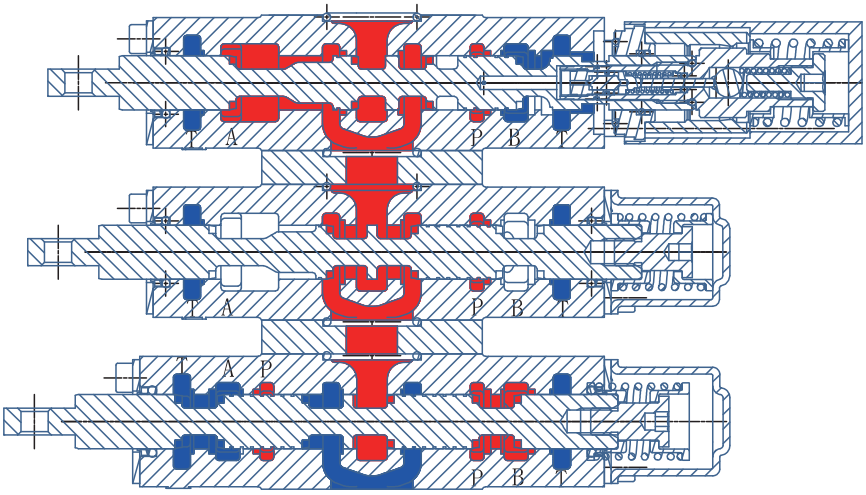

For multi-section valves, if one of the section spool is in 1 or 2 position, then there is no flow in its down stream section neutral passage. The main throttle occurs on the valve opening between bridge passage and spool. The operator can control more than one spools, but the flow rate for each controlled section is dependent on the load.

Inlet Section Dimensions

JK01 Inlet Section

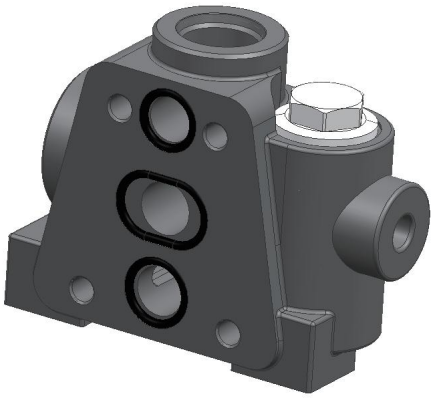

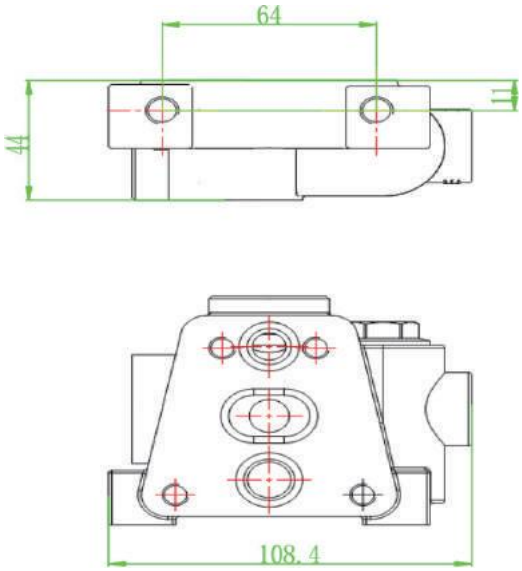

Inlet Section Dimensions

Code	Hydraulic Schematic	Main Functions	Note
JK01	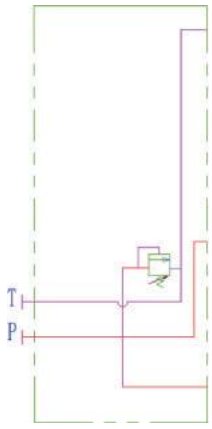	with a direct acting oil supplying overflow relief valve	

Typical Work Section (Main Section) Dimensions

ZK02 Work Section

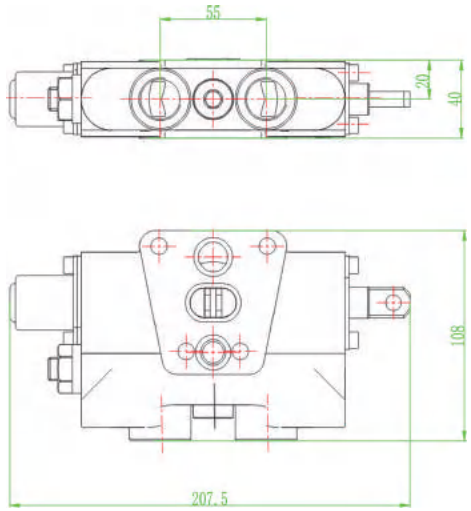

ZK04 Work Section

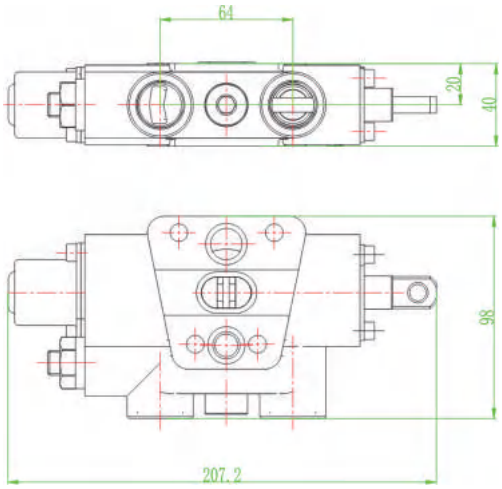

ZK06 Work Section

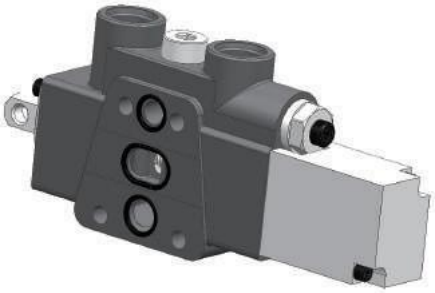

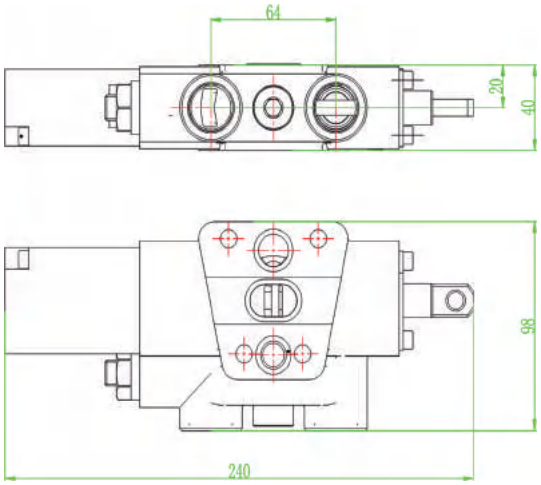

Typical Work Section (Main Section) Hydraulic Schematics

Code	Hydraulic Schematic	Main Functions	Notes
ZK01	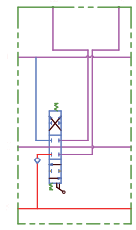	Spring return main valve body	
ZK02	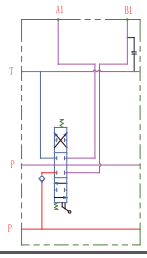	Spring return main valve body	
ZK03	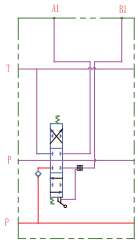	Spring return port B with hydraulic lock	
ZK04	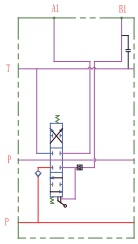	Spring return port B with hydraulic lock and shut-off valve	
ZK05	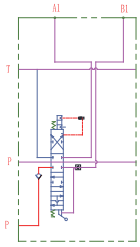	4th position floating with pressure spring B port with hydraulic lock	
ZK06	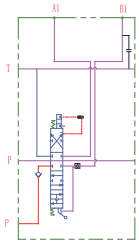	The 4th floating position is equipped with pressure spring and port B is equipped with hydraulic lock and shut-off valve	

Typical Return Section (End Cap) Dimensions

DK01 End Section

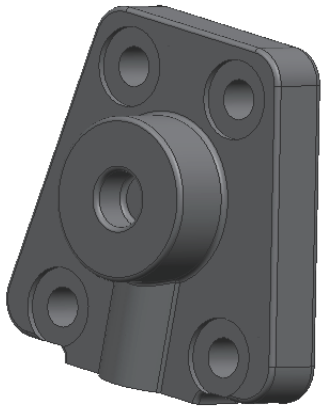

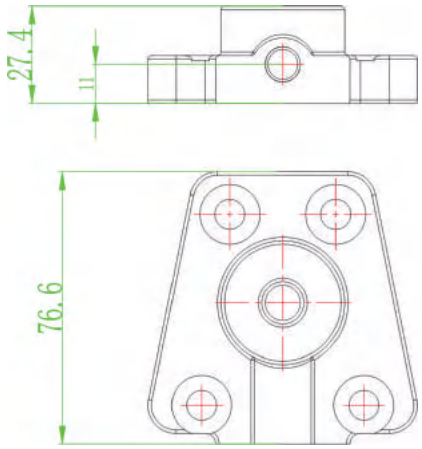

Typical Return Section (End Cap) Hydraulic Schematics

Code	Hydraulic Schematic	Main Functions	Notes
DK01	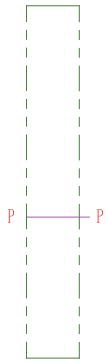	Oil return to tank through end cap then inlet port	
DK02	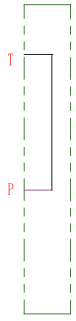	End section with power beyond	

Work Section (Main Section) Drive Styles

Drive Style Code	Hydraulic Schematic	Functions
KQ1	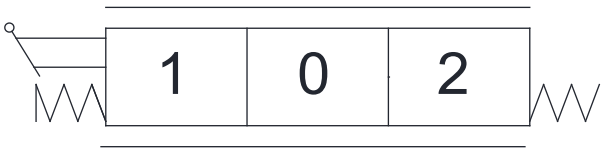	Standard manual control and spring return
KQ4		Manual control with floating position

Typical Spool Functions

Drive Style Code	Spool Type	Functions	Notes
FG1	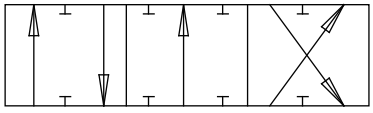	3-position 4-way Post compensation	Hydraulic cylinder applications
FG2	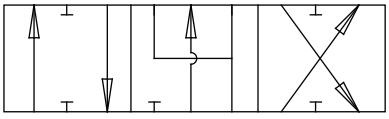	3-position 4-way Post compensation	Hydraulic motor applications
FG3	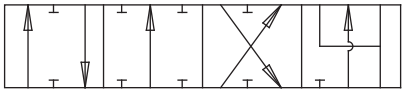	4-position 4-way 4th position floating Post compensation	Hydraulic cylinder applications

Application Example

Manual control

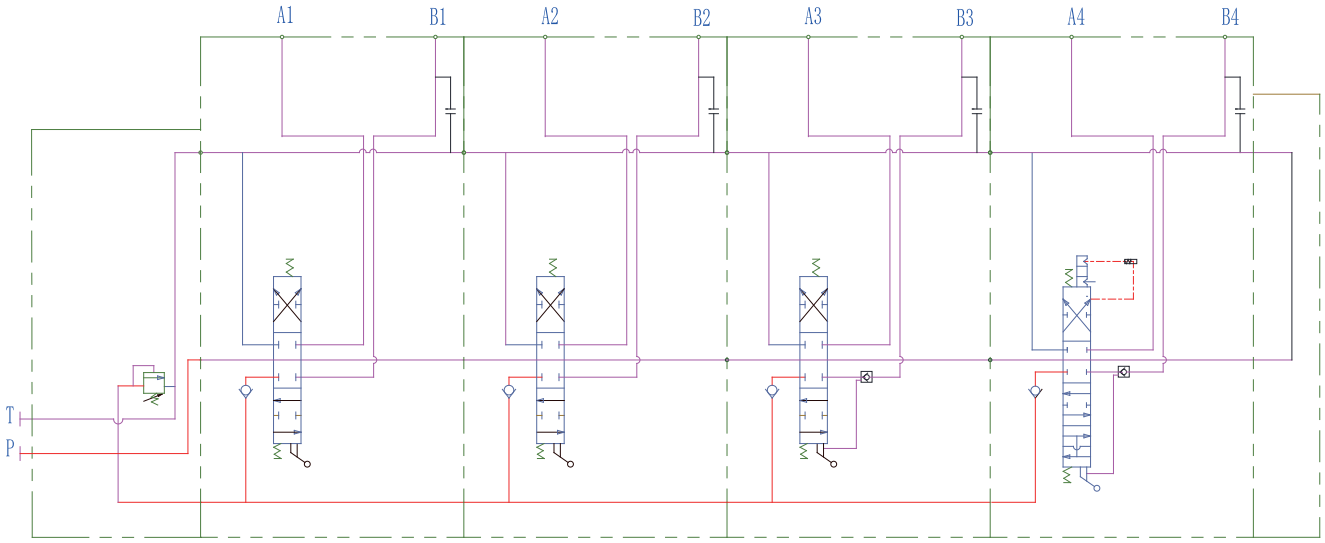

4 Sections Valve

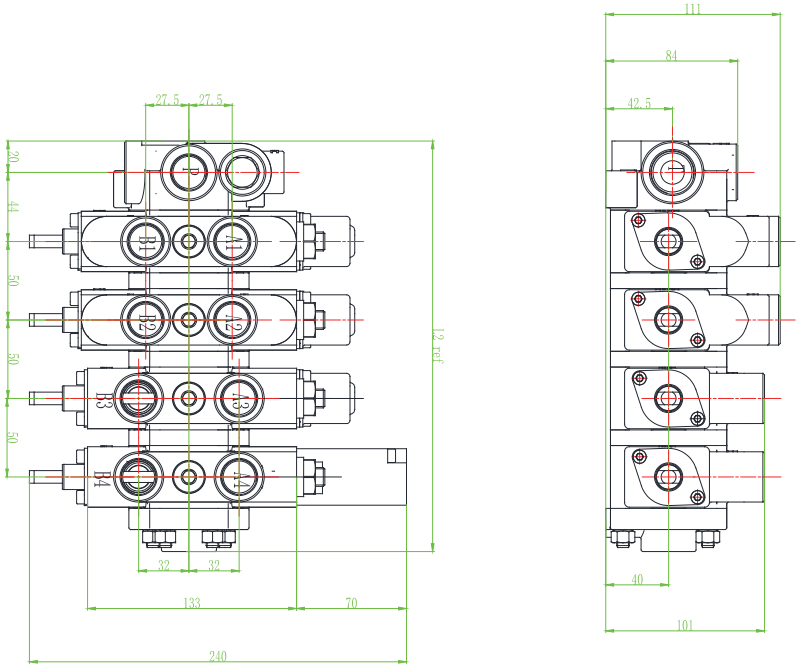

Ordering Code

GKVL80	-*	-JK**	/***	-DK**	-O1	-ZK**	KQ*	-FG*	-DC/**	-QL/***	-RF*	-O2	...
a	b	c	d	e	f	g	h	i	j	k	l	m	n

ⓐ Model
ⓑ Number of sections
ⓒ Inlet section code
ⓓ Main relief valve setting (bar)
ⓔ Return section code
ⓕ First section
ⓖ Work section code
ⓗ Drive style code
ⓘ Spool function code
ⓙ Electrical option 12VDC, 24VDC, 00=None electrical
ⓚ Expected flow rate (L/min)
ⓛ Overload relief valve style
ⓜ Second section
ⓝ .....

Ordering Example

GKVL80	-3	-JK01	/210	-DK01	-O1	-ZK02	-KQ5	-FG1	-DC/12	-QL/80	-RF1
a	b	c	d	e	f	g	h	i	j	k	l

ⓐ Model
ⓑ 3 section valve
ⓒ Inlet section code
ⓓ Main relief valve setting (210bar)
ⓔ Return section code
ⓕ First section
ⓖ Work section code
ⓗ Drive style code
ⓘ Spool function code
ⓙ No electrical
ⓚ Expected flow rate (80L/min)
ⓛ Load relief valve (without anti-cavitation valve)

-O2	-ZK01	-KQ1	-FG2	-DC/00	-QL/60	-RF0
m	n	o	p	q	r	s

ⓜ Second section
ⓝ Work section code
ⓞ Drive style code
ⓟ Spool function code
ⓠ No electrical
ⓡ Expected flow rate (60L/min)
ⓢ Load relief valve(without anti-cavitation valve)

-O3	-ZK01	-KQ2	-FG2	-DC/00	-QL/40	RF0
t	u	v	w	x	y	z

ⓣ Third section
ⓤ Work section code
ⓥ Drive style code
ⓦ Spool function code
ⓧ No electrical
ⓨ Expected flow rate (40L/min)
ⓩ Load relief valve (without anti-cavitation valve)

Notes

Ordered valve is GKVL80 series with 3 work sections. Inlet relief setting pressure is 210 bar, end section has no T port. In the first work section, manual control, the spool function is O function. Required flow rate is 80L/min, without load relief. In the second work section, manual control with floating position. The spool function is Y function, required flow rate is 60L/min, without load relief. In the third work section, manual control with floating position, the spool function is Y function. Port B with P. O. check valve. Required flow rate is 40L/min, without load relief valve.

© GRH|2025

Shanghai Guorui Hydraulic Technology Co., Ltd

Add. Room 2201, 1717 North Sichuan Road,
Hongkou Shanghai, China
P.C. 200080
Tel. +86-21-6218 3268
Mail. info@grhcn.com

Add. 666 West Shuanghu Road, Hi-tech Zone,
Jianhu Yancheng, Jiangsu, China
P.C. 224700
Tel. +86 0515-86316688 +86 400 188 1986
Mail. info@grhpro.com