国瑞液压 GUORUI HYDRAULICS

2.5YPF25F97F75D9*

Model	Displacement (ml/r)	Pressure(bar)		Speed(r/min)			Inlet			Outlet		
		Rated	Peak	Rated	Peak	Min.	L1x B1	T1	Ød1	L1x B2	T2	Ød2
2.5YPF25F97F75D9*	25	250	280	1500	2500	500	52.4 X 26.2	M10	Ø25	47.6 X 22.2	M10	Ø19
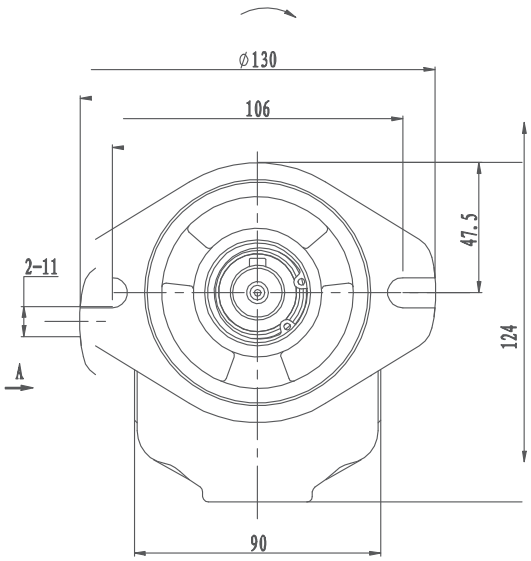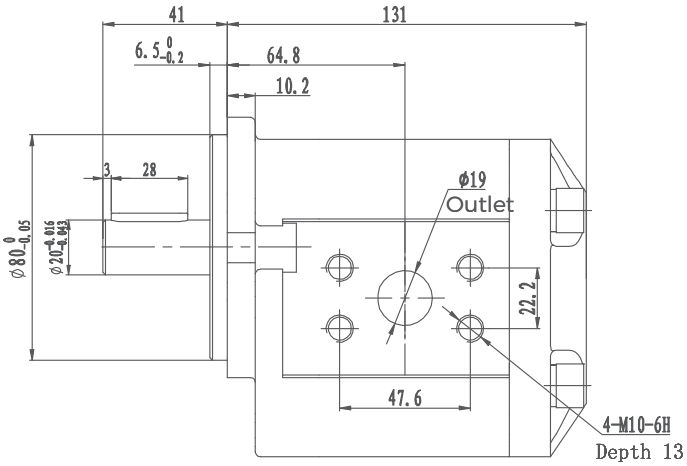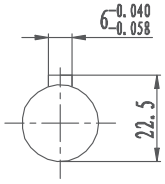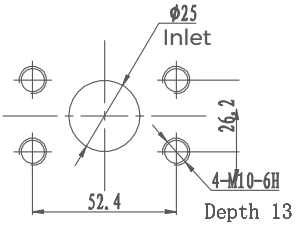
Dimensions