2/1 DPF**/**DF**T24S7*

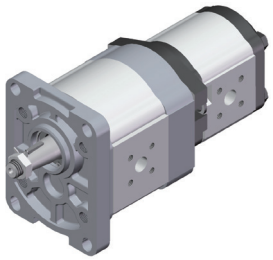

L(mm)	42.3	44	45.5	47	48.8	50	52	54	55	58	59	61	63
Displacement(ml/r)	4	6	8	10	12	14	16	18	20	23	25	28	30
L3(mm)	50.5	54	57	60	63	66	69	72.5	76	80.5	83	88	91
Displacement(ml/r)	1.3	2.0	2.7	3.4	4.1	5.1	6.1	/	/	/	/	/	/
L4(mm)	44	46	48	50	52	55	58	/	/	/	/	/	/
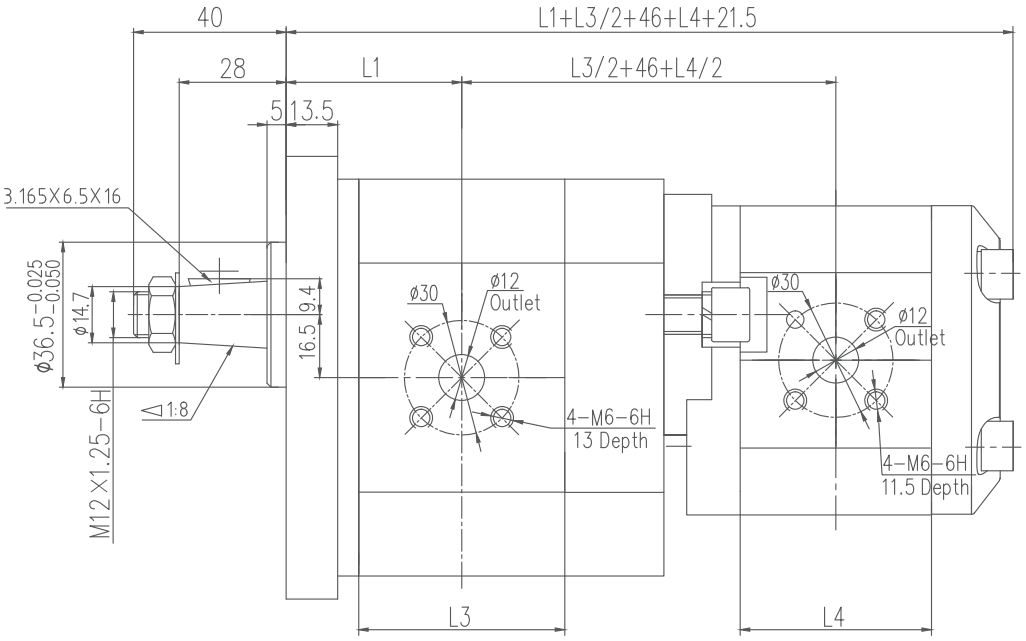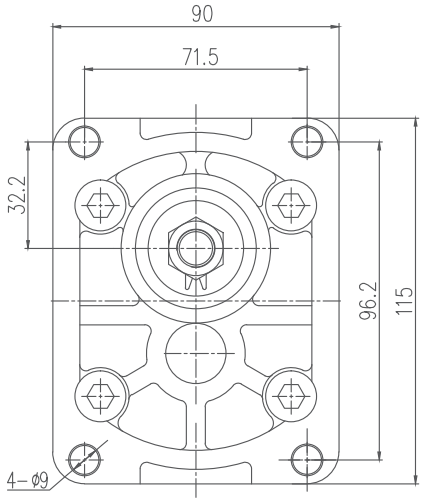
Dimensions